MAPLE STREET PARKING DECK

MOUNT PROSPECT, ILLINOIS

OCTOBER 16, 2019

95% CONSTRUCTION DOCUMENTS

PROJECT NO: 31-8504.00

SHEET LIST	
NO:	SHEET NAME
GENERAL	
G-000	COVER SHEET AND SITE LOCATION MAP
G 001	LIFE SAFETY PLANS
G-003	CODE ANALYSIS
STRUCTURAL	
S-001	GENERAL NOTES
S-002	ABBREVIATIONS AND LEGENDS
S-100	FOUNDATION PLAN
S-101	GROUND TIER PLAN
S-102	SECOND TIER PLAN
S-103	THIRD TIER PLAN
S-104	TOP TIER PLAN
S-210	PRECAST SHEAR WALL DETAILS
S-211	PRECAST LIGHT WALL DETAILS
S-410	STAIR TOWER NO. 1 ENLARGED PLANS
S-420	STAIR TOWER NO. 2 ENLARGED PLANS
S-501	TYPICAL DETAILS
S-502	PIPE GUARDS AND BOLLARD DETAILS
S-510	FOUNDATION SECTIONS AND DETAILS
S-511	FOUNDATION SECTIONS AND DETAILS
S-512	FOUNDATION SECTIONS AND DETAILS
S-520	PRECAST BEAM DETAILS
S-521	PRECAST TEE DETAILS
S-522	WATERPROOFING DETAILS
S-524	TYPICAL PRECAST CONNECTION DETAILS
S-525	PRECAST COLUMN DETAILS
S-526	COLUMN PLAN DETAILS
S-527	COLUMN PLAN DETAILS
S-540	PRECAST SECTION DETAILS
S-541	PRECAST SECTION DETAILS
S-570	STAIR AND ELEVATOR DETAILS
S-571	STAIR AND ELEVATOR DETAILS
S-650	LAP SPLICE SCHEDULES
S-651	LAP SPLICE SCHEDULES

SHEET LIST	
NO:	SHEET NAME
ARCHITECTURAL	
A 100	ARCHITECTURAL FLOOR PLANS
A 101	NW ELEVATOR/ STAIR ENLARGED PLANS
A 102	NE STAIR ENLARGED PLANS
A 200	WEST AND EAST ELEVATIONS
A 201	SOUTH ELEVATION
A 300	WALL SECTIONS WEST AND EAST ELEVATIONS
A 301	WALL SECTIONS SOUTH ELEVATION
A 400	METAL DETAILING
A 401	CANOPY DETAILS
A 500	GLAZING SYSTEM DETAILS
A 501	STAIR DETAILS
A 502	DETAILS
A 600	DOOR SCHEDULE AND DETAILS
ARCHITECTURAL GRAPHICS	
AG101	GROUND TIER PLAN
AG102	SECOND TIER PLAN
AG103	THIRD TIER PLAN
AG104	TOP TIER PLAN
AG201	GROUND TIER PLAN
AG202	SECOND TIER PLAN
AG203	THIRD TIER PLAN
AG204	TOP TIER PLAN
AG601	SIGN SCHEDULE AND DETAILS
AG701	SIGN MOUNTING DETAILS
EQUIPMENT	
Q-101-2	GROUND TIER PLAN - ALTERNATE 2
Q-102-2	SECOND TIER PLAN - ALTERNATE 2
Q-101-3	GROUND TIER PLAN - ALTERNATE 3
Q-102-3	SECOND TIER PLAN - ALTERNATE 3
Q-103-3	THIRD TIER PLAN - ALTERNATE 3

SHEET LIST	
NO:	SHEET NAME
FIRE PROTECTION	
F-001	FIRE PROTECTION GENERAL NOTES, DETAILS, SCHEDULES, SYMBOLS & ABBREVIATIONS
F-101	GROUND TIER FIRE PROTECTION PLAN
F-102	SECOND TIER FIRE PROTECTION PLAN
F-103	THIRD TIER FIRE PROTECTION PLAN
F-104	TOP TIER FIRE PROTECTION PLAN
F-401	FIRE PROTECTION ENLARGED PLANS
F-601	FIRE PROTECTION STANDPIPE RISER DIAGRAMS
PLUMBING	
P-001	GENERAL NOTES, SYMBOLS & ABBREVIATIONS
P-002	DETAILS
P-100	FOUNDATION PLAN
P-101	GROUND TIER PLAN
P-102	SECOND TIER PLAN
P-103	THIRD TIER PLAN
P-104	TOP TIER PLAN
P-601	DRAINAGE RISER DIAGRAMS
P-602	COLD WATER RISER DIAGRAMS
MECHANICAL	
M-001	MECHANICAL GENERAL NOTES, DETAILS, SCHEDULES, SYMBOLS & ABBREVIATIONS
M-101	GROUND TIER MECHANICAL PLAN
M-104	TOP TIER MECHANICAL PLAN
M-401	MECHANICAL ENLARGED PLANS
ELECTRICAL	
E-001	LIGHT FIXTURE SCHEDULE, GENERAL NOTES, SYMBOLS & ABBREVIATIONS
E-101	GROUND TIER PLAN
E-102	SECOND TIER PLAN
E-103	THIRD TIER PLAN
E-104	TOP TIER PLAN
E-401	ENLARGED ROOM PLANS
E-410	STAIR/ELEVATOR NO.1 PLANS
E-420	STAIR NO.2 PLANS
E-501	DETAILS
E-601	RISER DIAGRAMS
E-602	PANEL SCHEDULES
E-603	POWER ONE LINE DIAGRAM
Total: 92	

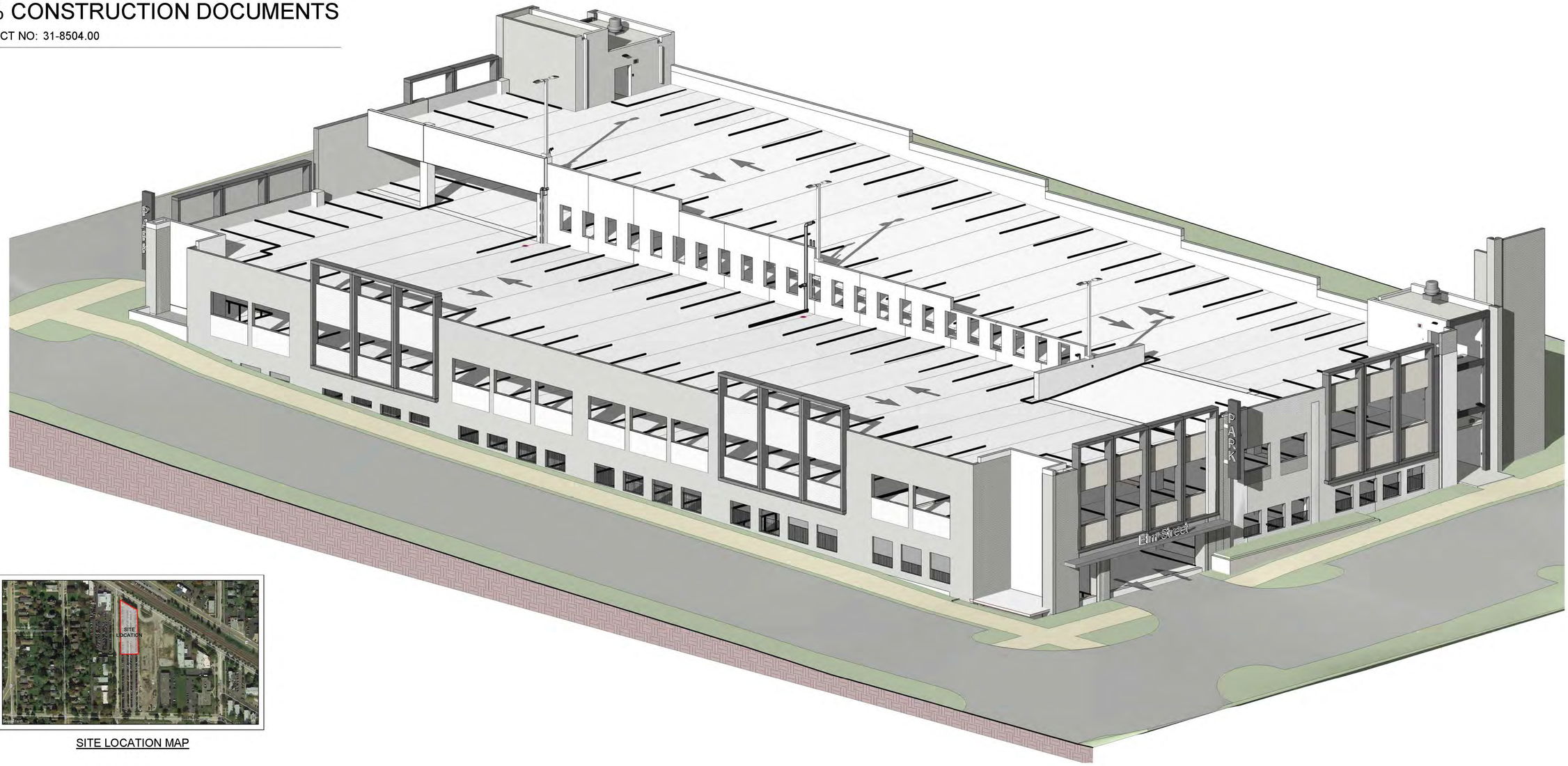

SITE LOCATION MAP

PRIME DESIGNER

WALKER CONSULTANTS

2895 Greenspoint Parkway, Suite 600
Hoffman Estates, IL 60169
Phone 847.697.2640
www.walkerconsultants.com

ARCHITECTURAL

Studio Level 1

STUDIO LEVEL 1
1001 North Warren Street
Gary, IN 46403
219.951.0214 Ph
www.studiolevel1.com

COPYRIGHT © 2019. ALL RIGHTS RESERVED. NO PART OF THIS DOCUMENT MAY BE REPRODUCED IN ANY FORM OR BY ANY MEANS WITHOUT PERMISSION FROM WALKER PARKING CONSULTANTS / ENGINEERS, INC.

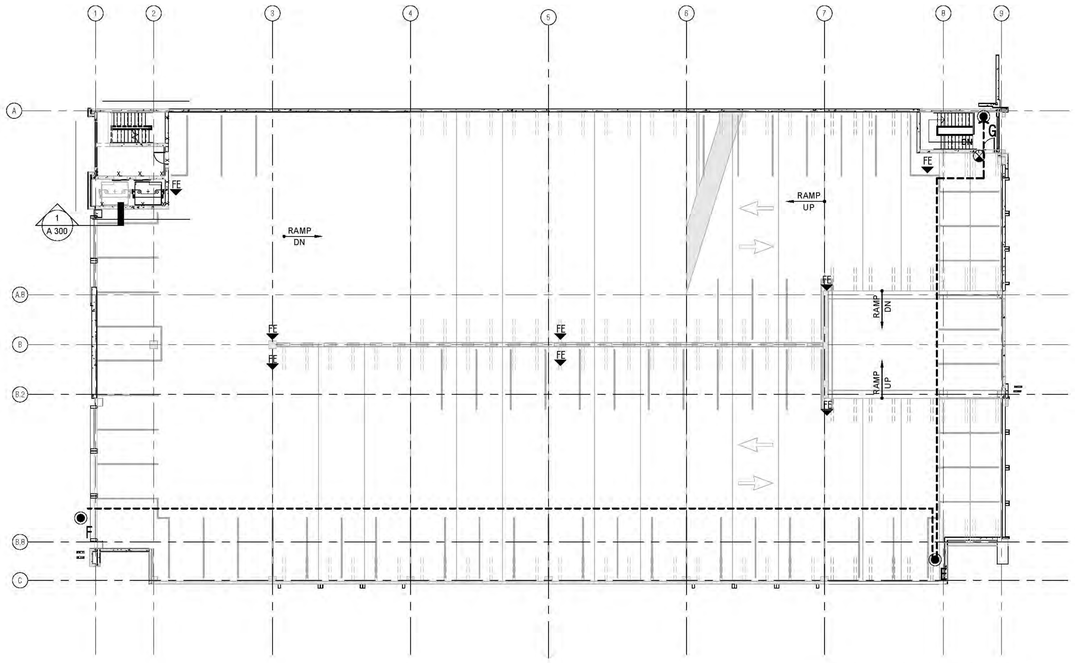

3 G 002 SECOND TIER LIFE SAFETY PLAN
1/16" = 1'-0"

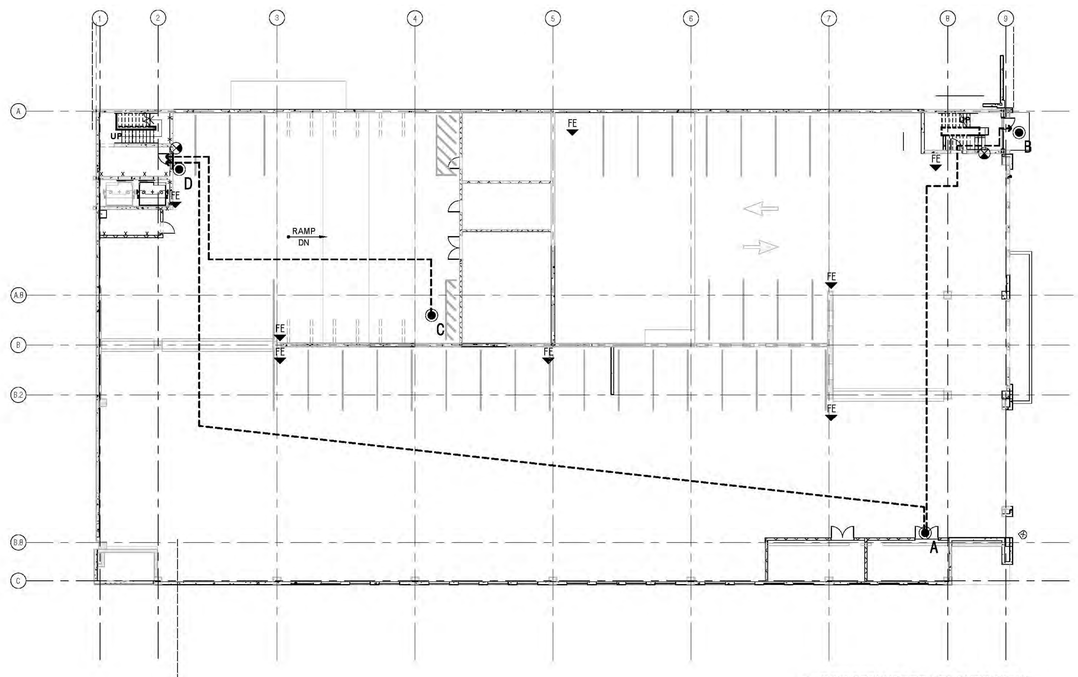

1 G 002 GROUND TIER LIFE SAFETY PLAN
1/16" = 1'-0"

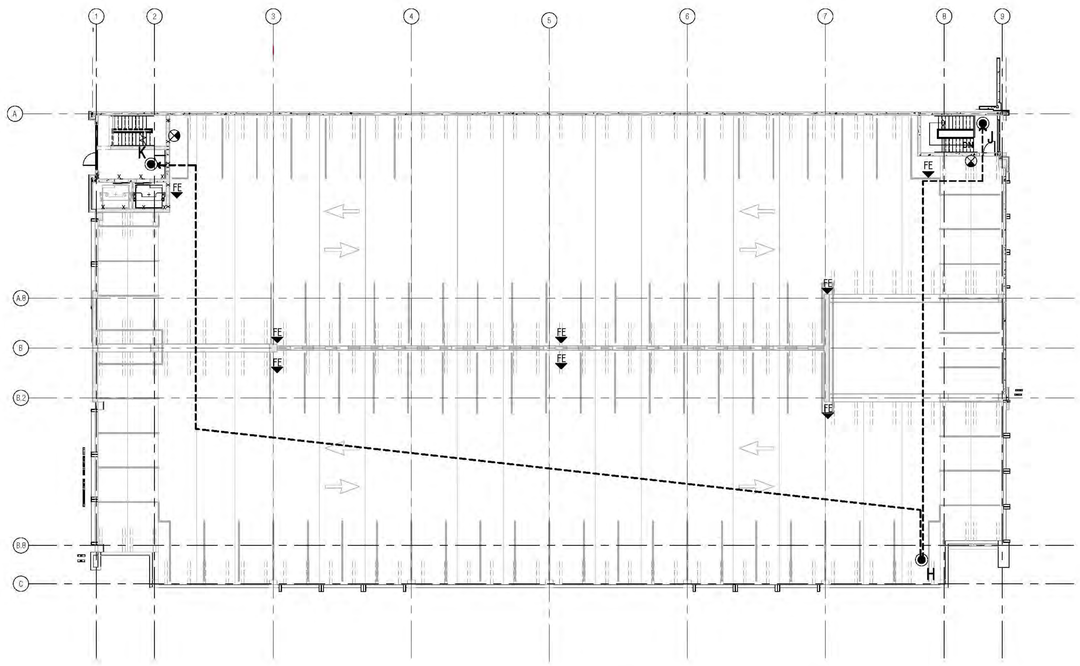

2 G 002 THIRD TIER LIFE SAFETY PLAN
1/16" = 1'-0"

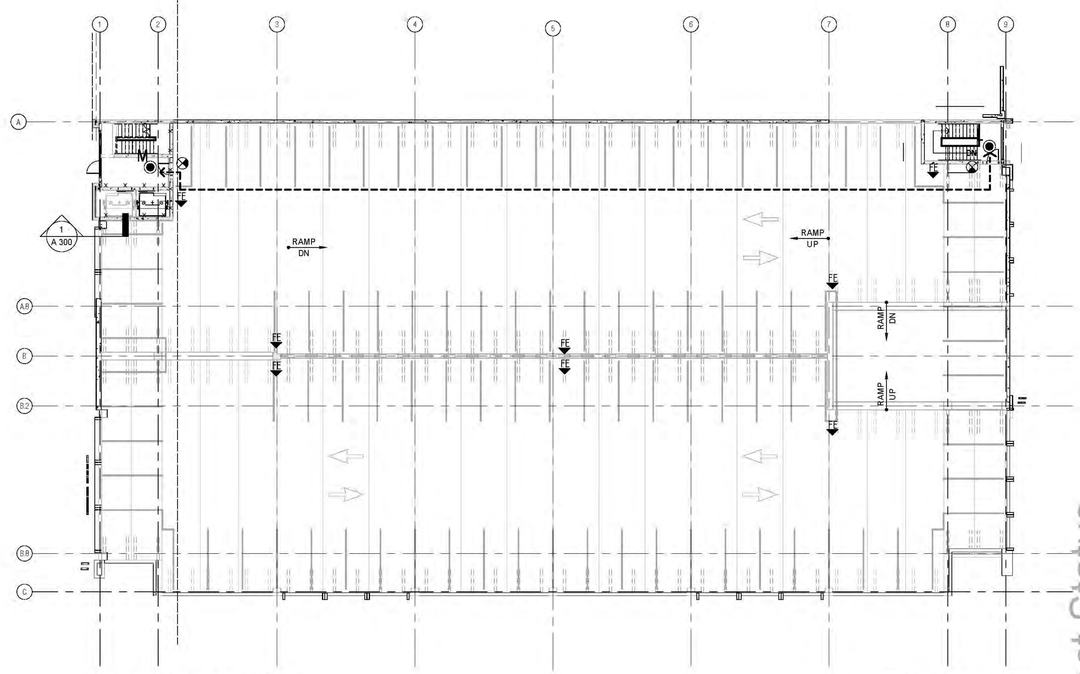

4 G 002 TOP TIER LIFE SAFETY PLAN
1/16" = 1'-0"

FIRE EXTINGUISHER LOCATIONS

DISTRIBUTION CRITERIA: 2015 INTERNATIONAL FIRE CODE (IFC), SECTION 906

SELECTION, INSTALLATION AND MAINTENANCE, PER 2015 IFC AND NFPA 10

OTHER REQUIREMENTS: 2015 INTERNATIONAL FIRE CODE, CHAPTER 24 FIRE PREVENTION CODE, 24.105 FIRE EXTINGUISHERS:

1. MINIMUM RATING 3A-40BC, LOCATIONS TO BE VISIBLE TO OCCUPANTS AND GENERAL PUBLIC, AND EASILY ACCESSIBLE.
2. MOUNTED SECURELY TO WALLS OR STRUCTURAL MEMBERS, TOP SHALL NOT EXCEED 5' IN HEIGHT ABOVE THE FINISHED FLOOR, BOTTOM SHALL BE A MINIMUM OF 2' ABOVE THE FINISED FLOOR.
3. ADEQUATE MARKINGS INDICATING LOCATION ARE TO BE PROVIDED. A 1" WIDE RED STRIPE SHALL BE APPLIED TO THE STRUCTURAL MEMBERS A MINIMUM OF 12" ABOVE THE THE FINISHED FLOOR

TABLE 906.3 (1) FIRE EXTINGUISHER PLACEMENT FOR CLASS A HAZARDS

FIRE CLASSIFICATION: CLASS A
HAZARD CLASIFICATION: LOW HAZARD

MAXIMUM FLOOR ABERA PER EXTINGUISHER = 3,000 SF PER UNIT OF A - EXTINGUISHER TYPE 3A-40 BC - MAXIMUM AREA PER EXTINGUISHER = 9,000 SF
MAXIMUM TRAVEL DISTANCE TO EXTINGUISHER - 75 FEET

LEGEND OF TRAVEL DISTANCES

ICB 2015, CHAPTER 10 MEANS OF EGRESS, TABLE 1017.2, TYPE S-2 STORAGE
TRAVE DISTANCE WITH APPROVED SPRINKLER SYSTEM = 300 FEET

FROM / TO	DISTANCE
A TO B	127'-0"
A TO D	271'-8"
C TO D	110'-6"
E TO F	123'-0"
E TO G	127'-6"
H TO J	127'-6"
H TO K	281'-0"
L TO M	229'-8"

GENERAL NOTES

1. DOOR SWING WHEN FULLY OPENED AND HANDRAILS, SHALL NOT LIMIT THE WIDTH OF A CORRIDOR BY MORE THAN 7".
2. EXIT DOORS SHALL BE OPERABLE FROM THE INSIDE WITHOUT THE USE OF A KEY OR SPECIAL KNOWLEDGE OR EFFORT.
3. FINAL LOCATIONS OF EXIT SIGNS AND FIRE EXTINGUISHERS TO BE COORDINATED WITH THE LOCAL FIRE MARSHALL.
4. DOORS OPEN IN THE DIRECTION OF EGRESS TRAVEL

LIFE SAFETY LEGEND

SYMBOL	DESCRIPTION
→	TRAVEL DISTANCE
x x x	1 HOUR WALL, SHAFT ENCLSURE
FE ▼	FIRE EXTINGUISHER W/ SURFACE MOUNTED CABINET
⊗	EXIT SIGN - WITH OR WITHOUT DIRECTIONAL ARROWS

PRIME DESIGNER

WALKER CONSULTANTS

2895 Greenspoint Parkway, Suite 600
Hoffman Estates IL 60169
847.697.2640 Ph
www.walkerconsultants.com

ARCHITECTURAL

Studio Level 1

STUDIO LEVEL 1
1001 North Warren Street
Gary, IN 46403
219.951.0214 Ph
www.studiolevel1.com

Mount Prospect

Maple Street Parking Deck

MOUNT PROSPECT, IL

MARK	DATE	DESCRIPTION
		REVISIONS
SHEET ISSUE:		DESIGN DEVELOPMENT
SHEET ISSUE DATE:		08/16/2019
PROJECT NO:		—
DRAWN BY:		GC
CHECKED BY:		—

Project Status

COPYRIGHT © 2019. ALL RIGHTS RESERVED. NO PART OF THIS DOCUMENT MAY BE REPRODUCED IN ANY FORM OR BY ANY MEANS WITHOUT PERMISSION FROM WALKER CONSULTANTS.

SHEET TITLE:
LIFE SAFETY PLANS

G 001

10/17/2019 9:24:20 AM C:\Users\jchapman\Documents\SLL PROJECTS\Mt Prospect\BIM 6\BIM CD SET 10.15.19.rvt

2015 INTERNATIONAL BUILDING CODE (IBC)

I. Chapter 3: Area Use and Occupancy Classification

A. Section 311 Storage Group S

B. Section 311.3: Low-Hazard Storage, Group S-2

1. Group S-2 Parking Garage (Open)

2. Group S-2 Parking Garage (Enclosed)

II. Chapter 4: Special Detailed Requirements Based on Use and Occupancy

A. Section 406: Motor-Vehicle-Related Occupancies

B. Section 406.1 General

C. Section 406.2 Definitions

1. Open & Enclosed Parking Garage (Ramp-`Access Open Parking Garage)

D. Section 406.4: Public Parking Garages

1. Open & Enclosed Parking Garage (Group S-2) Provided Per Sections 406.4.2 through 406.4.8 & 406.5 and Provisions for Group S Occupancies and Section 510

E. Section 406.4.1: Clear Height

1. Vehicle and Pedestrian Areas Require 7 Foot clear Height / Provided
2. Van Accessible Areas Require 8 Foot 2 Inches Clear Height / Provided

F. Section 406.4.2: Guards

1. Guards Provided Per Section 1015

G. Section 406.4.3: Vehicle Barrier Systems

1. Vehicle barriers shall comply with the loading requirements of Section 1607.8.3/ Provided

H. Section 406.4.4: Ramps

1. Ramps For Parking And Vertical Circulation Required Not to Exceed Slopes of 1:15/max 6.67%/ Provided

I. Section 406.4.5: Floor Surface

1. Concrete Slope to Drain Required / Provided

J. Section 406.4.6: Mixed Occupancy Separation

1. Mixed Occupancy Separation….does not apply

K. Section 406.5: Open Parking Garages

1. Open Parking Garage (Group S-2) Provided Per Sections 406.5.1 Through 406.5.11

L. Section 406.5.1: Construction

1. Open Parking Garage Type IA / Provided Per table 406.5.4 and Section 406.5.5.

M. Section 406.6 Enclosed Parking Garage (Below Grade) Shall Comply with Section 406.1 through 406.3 Required/Provided.

N. Section 406.5.2: Openings –

1. 20% Total Perimeter Wall Area Open Required at Each Tier / Provided
2. Distribute Openings Over 40% of Perimeter except if 20% Open on Two Opposing Sides
3. Parking Structure Openings (Project)
4. Typical **(Ground) Tier**: Open Parking Structure:
   a. Percent of Perimeter Area:
      1) Perimeter = 8467.75 SF
      2) Openings = 429.3 SF
      3) Percent of Openings = 429.3 SF /8467.75 S.F. = 5%
      4) 20 Percent Openness is Required / 5% Provided MECHANICAL VENTILATION PROVIDED
   b. Percent of Perimeter Length:
      1) Perimeter =725.6 LF
      2) Openings = 164.13 LF
      3) Percent of Length Open = 164.13 / 725.6 = 22.6%
      4) 40 Percent of Length is Required / 22.6% Provided MECHANICAL VENTILATION PROVIDED
5. Second Tier: Open Parking Structure:
   a. Percent of Perimeter Area:
      1. Perimeter = 8,467.75 SF
      2. Openings = 1,729.33 SF
      3. Percent of Openings 1,729.33 / 8,467.75 = 20.4%
      4. 20 Percent Openness is required/ 20.4% provided

   Percent of Perimeter Length
   1. Perimeter = 725.6 LF
   2. Openings = 280.64 LF
   3. Percent of Length Open = 280.64 / 725.6 = 38.6
   4. 40 Percent of Length is Required 38.6 % provided
   SEE EXCEPTION: except if 20% open on two opposing sides.
   West Elevation Openness: 558.5 SF openings / 1,452.91 SF area = 38.4% open
   East Elevation Openness: 463.33 SF openings / 1,452.91 SF area = 31.8% open
6. Third (Top) Tier: Open Parking Structure:

O. Section 406.5.2.1: Openings Below Grade…does not apply (light well SE corner)

P. Section 406.5.3: Uses…does not apply

1. Mixed Uses…does not apply

Q. Section 406.5.4: Area and Height

1. Table 406.5.4: Open Parking Garages Area and Height
   a. Required Area Per Tier is < Unlimited SF Permitted / 29,672 SF Provided (Meets Requirement) (See Section 406.5.5.5 for Area and Height Increases)
   b. Maximum Height (in Tiers) With Ramp Access: Unlimited Permitted / 4 Tiers Provided
2. Project areas:

a.	Ground Tier:	29,672 SF
b.	Second Tier:	29,672 SF
c.	Third Tier:	29,672 SF
d.	Fourth Tier (Top):	7,580 SF
	Total Building Area:	96,596 SF

R. Section 406.5.4.1: Single Use

1. Open Parking Garage is permitted per Table 406.5.4 / Provided
2. Height (In Tiers) with Ramp Access: Unlimited Tiers Permitted / 4 Tiers Provided

S. Section 406.5.5: Area and Height Increases

1. Garages With Sides 50% Open on Three-Fourths of The Building's Perimeter Are Permitted to be Increased by 25 Percent… does not apply
2. Unlimited SF Permitted / 29,672 SF Provided

T. Section 406.5.6: Fire Separation Distance

1. Fire Separation Distances Required per Tables 601 and 602 and Section 705 / Provided. Ten Feet Minimum Required to Property Line or Centerline of Public Right-of-Way.

   North – Not Provided
   South – Provided
   East – Provided
   West – Provided

U. Section 406.5.7: Means of Egress

1. Means of Egress Per Chapter 10 Required / Provided
2. 2 Stairways required (Minimum) / 2 Stairways Provided

V. Section 406.5.8: Standpipe System

1. Manual, Dry Standpipe System Required / Provided Per Section 905.3 (See Fire Protection)

W. Section 406.5.9: Enclosure of Vertical Openings

1. Enclosure of Vertical Openings Not Required / Provided Per Section 406.5.7

X. Section 406.5.10: Ventilation

1. Mechanical Ventilation Required/Provided (for Enclosed Parking Garage)
2. Natural Ventilation Provided by Perimeter Openings Per Section 406.5.2 (for Open Parking Garage)

Y. Section 406.5.11: Prohibitions

1. Alternate Uses are Prohibited/Provided

Z. Section 406.6: Enclosed Parking Garages

1. Enclosed Parking Garage (Group S-2) Provided Per Sections 406.6.1 Through 406.6.3

AA. Section 406.6.1: Heights and Areas Per Table 504.3….does not apply

BB. Section 406.8.2: Ventilation (Mechanical Ventilation Required For Enclosed Parking Garage) Required/Provided

1. Ventilation Provided Per 2015 International Mechanical Code
2. Natural Ventilation Provided by Perimeter Openings per Section 406.5.2 (for Open Parking Garage)

CC. Section 406.8.6: Automatic Sprinkler System Required per Village of Mount Prospect Requirements/Provided

III. Chapter 5: General Building Heights and Areas

A. Section 503.1 General

1. The Building Height and Area Shall Not Exceed The Limits Specified in Table 406.5.4 For an Enclosed and Open Garage / Provided.

B. Section 508.3.3 Separation

1. Single Use S-2 Open Parking Garage 0 Hours Required / 0 Hours Provided
2. Section 508.4 Separated Occupancies…does not apply
3. Table 508.4: Required Separation of Occupancies (Hours) Provided Per Table 508.4

C. Section 510.3 Group S-2 Enclosed Parking Garage with Group S-2 Open Parking Garage Above.

1. All Criteria Must Be Met per Section 510.3 to Classify Enclosed Parking Garage as a Separate and Distinct Building for Purpose of Type of Construction Required/Provided.

IV. Chapter 6: Types of Construction

A. Table 601: Fire-Resistance Rating For Building Elements (See Structural)

1. See Structural Drawings for Specific Fire Ratings

B. Table 602: Fire Resistance Rating Requirements For Exterior Walls Based on Fire Separation Distance

1. Note C – Open Parking Garages Complying With Section 406 Shall Not be Required to Have a Fire Resistance Rating / Provided
2. Fire Separation Distance Provided:
   a. On North: Less Than 5' to the Assumed Lot Line
   b. On South: More Than 10' to the Assumed Lot Line
   c. On East: More Than 10' to the Assumed Lot Line
   d. On West: More Than 10' to the Assumed Lot Line

V. Chapter 7: Fire and Smoke Protection Features

A. Section 705.8: Openings

1. Openings Provided Per Sections 705.8.1 through 705.8.6

B. Section 705.8.1: Allowable Area of Openings

1. Openings Provided Per Table 705.8

C. Section 705.8.2: Protected Openings…does not apply

D. Section 705.8.3: Unprotected Openings

1. Unprotected Openings Provided Per Section 705.8.3 (Sprinkler system provided)

E. Section 712.1.10: Parking Garages

1. Automobile Ramps Provided Per Sections 406.5 and 406.6

F. Section 712.1.10.2: Elevators

1. Vertical Openings for Elevator Hoistsways in Open or Enclosed Parking Garages That Serve Only the Parking Garage and Complying With Sections 406.5 and 406.6 Respectively Shall be Permitted/Provided.

G. Section 713.4: Fire-Resistant Rating (Shaft) – Type 1A

1. Elevator Shaft Requires 2 Hour Fire Rating For Four Stories or More/Provided

VI. Chapter 9: Fire Protection Systems

A. Table 903.2: Summary of Occupancy-Related Automatic Sprinkler Thresholds

1. Automatic Sprinkler System is Required per Village of Mount Prospect Requirements/Provided

B. Section 903.4: Sprinkler System Supervision and Alarms/Provided

C. Section 905 Standpipe Systems

1. Section 905.1 General

2. Standpipe System Required Per International Fire Code (IFC) / Provided

D. Section 906: Portable Fire Extinguishers

1. Section 906.1 Where Required

2. Portable Fire Extinguishers Required / Provided Per International Fire Code & NFPA 10 (See Architectural Plans for Locations)

E. Section 907: Fire Alarm and Detection Systems (See Electrical)

F. Section 911: Fire Command Center/Not Provided

G. Section 912: Fire Department Connections (See Fire Protection)

H. Section 914: Emergency Responder Safety Features/Not Provided

I. Section 915: Emergency Responder Radio Coverage/Not Provided

VII. Chapter 10: Means of Egress

A. Section 1003.2: Ceiling Height

1. Ceiling Height Required for Parking Structures is provided per Exception 7 and Section 406.4.1 / Provided

B. Section 1003.3 Protruding Objects

1. Protruding Objects Shall Comply With Sections 1003.3.1 through 1003.3.4 / Provided

C. Section 1004: Occupant Load

1. Table 1004.1.2: Maximum Floor Area Allowances Per Occupant (Parking Garages) 28,975 SF / 200 SF Gross / Person = 145 Occupants Per Tier

D. Section 1005: Means of Egress Sizing

1. Section 1005.2: Minimum Width Based on Component
   a. Minimum Width of Component is Required / Provided Per Section 1004.1 and Other Sections of the Code

E. Section 1005.3 Required Capacity Based on Occupant Load

F. Section 1005.3.1: Stairways

1. Typical Tier Open Parking Garage Use Group S-2 (With Sprinkler System):
   a. At Stair: 0.3 Inches Per Person x 145 Occupants = 44 Inches Required / 95" provided

G. Section 1005.3.2: Other Egress Components

1. Typical Tier Open Parking Garage Use Group S-2 (Without Sprinkler System):
   a. At Door: 0.2 Inches Per Person x 145 Occupants = 29 Inches required / 68 Inches provided

H. Section 1006: Number of Exits and Exit Access Doorways.

1. Section 1006.3.1 Egress Based on Occupant Load
   a. Exits Required Per Table 1006.3.1 / Provided

I. Section 1006.2.2.5 Vehicular Ramps

a. Vehicular Ramps are not Considered an Exit Access Ramp / Provided

J. Section 1007: Exit and Exit Access Doorway Configuration

1. Section 1007.1: General

2. Section 1007.1.1: Two Exits or Exit Access Doorways.
   a. Exits Configuration Required Per Section 1007.1.1
   b. Typical Tier Diagonal Dimension = 269 Feet
   c. Minimum Distance Between Exits Required = 269 Feet / 2 = 134.5 Feet Required /198 Feet Provided

K. Section 1009: Accessible Means of Egress

1. Section 1009.2.1 Elevators Required…does not apply
2. Section 1009.3 Stairways
   a. Stairways Required / Provided Per Section 1009.3 and Exception 6
2. Section 1009.4 Elevators
   a. Elevators Required to Comply With Emergency Operation per ASME/CSA B44 A17.1 and in Accordance with Chapter 27, Section 3003 and Exception 1 / Provided

DD. Section 1010 Doors, Gates and Turnstiles

1. Doors Required for Egress / Provided Per Section 1010.1 and Section 1022.2

EE. Section 1010.1.1 Size of Doors

1. Door Size Required Per Capacity / Doors Provided Per Section 1010.1.1

FF. Section 1010.1.1.1 Projections into Clear Width

1. Required Door Projections / Provided Per section 1010.1.1 and Per Exception

GG. Section 1010.1.2 Door Swing

1. Doors Swing Required / Provided Per Section 1010.1.2

HH. Section 1010.1.2.1 Direction of Swing

1. Door Swing Required to Swing in Direction of Egress Travel / Provided

II. Section 1010.1.3 Door Opening Force

1. Door Opening Force Required / Provided Per Section 1010.1.3

JJ. Section 1010.1.4.2 Power-Operated Doors…does not apply

1. Power-Operated Doors Provided Per section 1010.1.4.2?

KK. Section 1010.1.5 Floor Elevation

1. Floor Landings Required / Provided Per Section 1010.1.5

LL. Section 1010.1.6: Landings at Doors

1. Landings Width Required / Provided Per Section 1010.1.6

MM. Section 1010.1.7: Thresholds

1. Thresholds Required / Provided Per Section 1010.1.7

NN. Section 1011.12.1 Stairway to Elevator Equipment….does not apply

1. Stairway Required / Stairway provided

OO. Section 1012: Ramps

1. Section 1012.1: Scope…does not apply
   a. The Provisions of Section 1012.3 Through 1012.10 Required / Provided Where Vehicle Ramps That Are Not Part of an Accessible Route Are Used For Pedestrian Exit Access

PP. Section 1013: Exit Signs

1. Section 1013.1 Where Required
   a. Exit Signs Required / Provided (See Electrical)

QQ. Section 1014: Handrails

1. Section 1014.1: Where Required
   a. Handrails Required at Stairways / Provided Per Sections 1014.2 Through 1014.9

RR. Section 1015: Guards

1. Section 1015.1: General

2. Section 1015.2 Where Required
   a. Required Guards Along Open-Sided Walking Surfaces Including Stairs Per Sections 1015.2 through 1015.7/ Apply? No
   b. Required Guard Where Mechanical Equipment is Within 10 Feet of a Roof Edge Per 1015.5 / Apply? No
   c. Required Guard Where Roof Hatch is Within 10 Feet of a Roof Edge Per 1015.6 / No Roof Hatch Provided

SS. Section 1017: Exit Access Travel Distance

1. Section 1017.2: Limitations
   a. Exit Access Travel Distance Provided Per Table 1017.2 Table 1017.2 Exit Access Travel Distance

   Typical Tier Open Parking Garage Use Group S-2 = 400 Feet Required (With Sprinkler System) / 195 Feet Maximum Provided

TT. Section 1028: Exit Discharge

1. Section 1028.1: General
   a. Stairways Exit Required Per Section 1028.5 / Provided
2. Section 1028.2: Exit Discharge Width or Capacity
   a. The Exit Capacity of the Exit Discharge is Not Less Than the Exit Discharge of The Exits Being Served / Provided
3. Section 1028.5: Access to Public Way
   a. Stair Exit Discharge Directly to a Public Way is Required/ Provided

VIII. Chapter 24: Glass and Glazing

A. Section 2407.1.3: Parking Garages….does not apply

1. Glazing Materials are Not Installed in Handrails of Guards

B. Section 2049: Glass in Elevator Hoistways and Elevator Cars…does not apply

IX. Chapter 30: Elevators and Conveying Systems

A. Section 3002: Hoistway Enclosures….does not apply

B. Section 3002.4: Elevator Car to Accommodate Ambulance Stretcher

1. Minimum of One Elevator Car Shall Accommodate an Ambulance Stretcher (24 Inches x 84 Inches) Required / Provided

C. Section 3005: Machine Rooms

1. Section 3005.1 Access….does not apply
   a. Machine Control Room Access Required / Provided Machine room provided at Ground Level.
2. Section 3005.2: Venting
   a. Venting and Air Conditioning Required / Provided
3. Section 3005.4: Machine Rooms, Control Rooms, Machinery Spaces, and Control Spaces
   a. Control Room Required to Have Fire-Resistance Rating not less than Hoistway Enclosure / Provided

PRELIMINARY - DO NOT USE FOR CONSTRUCTION

PRIME DESIGNER

WALKER CONSULTANTS

2895 Greenspoint Parkway, Suite 600
Hoffman Estates IL 60169
847.697.2640 Ph
www.walkerconsultants.com

ARCHITECTURAL

Studio Level 1

STUDIO LEVEL 1
1001 North Warren Street
Gary, IN 46403
219.951.0214 Ph
www.studiolevel1.com

Mount Prospect

MAPLE STREET
PARKING DECK

MOUNT PROSPECT, IL

MARK	DATE	DESCRIPTION
		REVISIONS

SHEET ISSUE:	95% CONSTRUCTION DOCUMENTS
SHEET ISSUE DATE:	10/18/2019
PROJECT NO:	31-8504.00
DRAWN BY:	JVK
CHECKED BY:	DJM

COPYRIGHT © 2019. ALL RIGHTS RESERVED. NO PART OF THIS DOCUMENT MAY BE REPRODUCED IN ANY FORM OR BY ANY MEANS WITHOUT PERMISSION FROM WALKER CONSULTANTS.

SHEET TITLE:
CODE ANALYSIS

G-003

10/17/2019 12:01:12 PM C:\Revit Projects\31-8504.00-MAPLE STREET PG-STRUCT_R19_jvkappel.rvt

I. GENERAL

A. CONSTRUCTION

1. Construction shall be in accordance with all applicable Federal, State of Illinois, and Village of Mount Prospect codes and ordinances (IBC 2015) including fire codes.
2. This structure is classified as an open parking structure, occupancy Group S-2, and as construction Type 1A, Unprotected, Non-Combustible.
3. Contractor shall check all plans, sections, and details drawn on Structural Drawings for compatibility with Architectural Drawings. Structural Drawings show only structural elements of parking structure. Discrepancies, if any, shall be reported to Engineer for clarification or adjustments before proceeding with work.

B. DESIGN LOADS (All loads are service loads unless noted)

Description		Load
1. Dead Loads		
a. Floor system and framing		Self-Weight
b. Mechanical, Electrical, Plumbing		3 psf
2. Live Loads		
a. Roof (Stair / Elevator Towers)		21 psf
b. Supported parking and drive areas	Tees, Beams	40 psf unreduced
	Columns	32 psf reduced
c. Concentrated wheel load (on 4.5" x 4.5" area)		3,000 lbs
d. Bumper impact, on 1-ft sq, 18" & 27" (not concurrently) above finished floor		6,000 lbs
e. Slabs on grade		40 psf
f. Stairs, landings, and lobbies		100 psf
g. Elevator machine room		150 psf
3. Snow loads		
a. Ground snow load (P_g)		25 psf
b. Flat roof snow load (P_f)		21 psf
c. Snow exposure factor (C_e)		1.0
d. Snow load importance factor (I_s)		1.0
e. Roof thermal factor (C_t)		1.2
4. Wind Design Criteria		
a. Basic wind speed (3-second gust)		115 mph (ultimate)
b. Wind load importance factor(I_w)		1.0
c. Wind exposure		B
d. Internal pressure coefficient		±0.18
e. Components and cladding		See Specifications
5. Seismic Design Criteria		
a. Seismic importance factor (I_E)		1.0
b. Spectral response acceleration for short period (S_S)		0.134g
c. Spectral response acceleration for 1-second period (S_1)		0.066g
d. Site class		D
e. Design spectral response acceleration for short period (S_{DS})		0.143g
f. Design spectral response acceleration for 1-second period (S_{D1})		0.099g
g. Seismic design category		B
h. Resisting system in east-west direction		
1. Basic structural system		Bearing Wall System - Intermediate Precast Shear Walls
2. Design base shear (V)		338k ultimate
3. Seismic response coefficient (C_S)		0.0357
4. Response modification factor (R)		4
5. Deflection amplification factor (C_d)		4
6. Analysis procedure		Equivalent Lateral Force
i. Resisting System in north-south direction		
1. Basic structural system		Bearing Wall System - Intermediate Precast Shear Walls
2. Design base shear (V)		338k ultimate
3. Seismic response coefficient (C_S)		0.0357
4. Response modification factor (R)		4
5. Deflection amplification factor (C_d)		4
6. Analysis procedure		Equivalent Lateral Force
6. Thermal & Volume Change Design Criteria: Per PCI Design Handbook (7th Edition)		
a. Design temperature differential		67° F
b. Annual average ambient relative humidity		74%

C. MISCELLANEOUS

1. Fire ratings, conforming to MNL-124-89 and STM E119 are as follows:

Structural Element	Hours Provided	Hours Required
a. Precast concrete tees	2	2
b. Precast Concrete beams	3	3
c. Concrete columns	3	3
d. Concrete walls	3	3
e. Stair/ elevator towers	3	3

2. Future Expansion
   a. This parking facility is not designed for future expansion.
3. Existing Construction
   a. Field verify all existing elevations, dimensions, and conditions shown on drawings before any material fabrication and erection or concrete placement for new construction. Immediately report all discrepancies to Engineer.

II. FOUNDATION WORK

A. Foundations, retaining walls, basement walls, foundation drainage and slabs on grade have been designed in accordance with recommendations of SET Consultants Report Number 1300, dated January 4, 2019 Including supplements dated July 15, 2019.

B. Foundation Design

Description	Allowable Load
1. Spread footings	net 4,000 psf
2. Strip footing	net 4,000 psf

C. Retaining Wall Design

1. Design equivalent fluid pressure behind basement type walls laterally supported top and bottom.	p= (65 x h + 1/2 x q) AWT p= (100 x h + 1/2 x q) BWT
2. Design equivalent fluid pressure behind cantilevered retaining walls	p=(45 x h + 1/2 x q) AWT p=(85 x h + 1/2 x q) BWT
3. Coefficient of sliding friction	tan (delta) = 0.35

p = pressure (psf); h=height (ft);
AWT = above water table
BWT = below water table
q = surcharge (psf) = 40 psf @ interior, 250 psf @exterior

D. See Specifications Section of Division 31 for excavation, dewatering and compaction.

E. Footing shall be on:
1. Undisturbed natural soil OR
2. Compacted engineered fill

F. Foundation shall extend below finished grade 42" (minimum)

G. Excavation depths indicated on Drawings are to be used for bidding purposes only and are approximate.

H. Before placement of granular fill below slab-on-grade, entire surface shall be proofrolled and observed by testing agency for soft or unstable material. Remove unacceptable material and replace with approved granular fill.

III. CONCRETE

A. Material Properties - Concrete:

	F'c psi at 28 day	Max W/C Ratio	Max Slump Inches	Total Air Content (±1.5%)	Max. Nom Aggregate. Size
1. Cast-in-place concrete					
a. Footings	4,000	0.45	4	No Test	2"
b. Column pilasters	4,000	0.45	4	5	3/4"
c. Tee toppings, pour strips#	5,000	0.40	3*	7	3/4"
d. Foundation Walls	4,000	0.45	3*	5	3/4"
e. Slab on grade	4,000	0.45	4	6	1
f. All other	4,000	0.45	4	5	3/4"
2. Precast concrete					
a. Columns	6,000	0.38	**	5 1/2	3/4"
b. Tees	6,000	0.38	**	5 1/2	3/4"
c. Beams	6,000	0.38	**	5 1/2	3/4"
d. Solid slabs	6,000	0.38	**	5 1/2	3/4"
e. Wall panels	6,000	0.38	**	5 1/2	3/4"
3. Other Concrete					
a. Columns base drypack	8,000	N/A	0	No Test	No. 4
b. Masonry wall grout fill	3,000	N/A	8-10	No Test	3/8"
c. NSNS grout	8,000	N/A	0	No Test	No. 4

*Prior to adding water reducer.
**No slump requirement.
3 gal/cy calium nitrate corrosion inhibitor and add micro synthetic fiber at manufacturer's recommended rate, but not less than 1.5 lb/cy.

4. For additional information regarding Air Entrainment, see Specification Section 033000.
5. All concrete is Normal Weight 145 pcf.

B. Material Properties - Reinforcing and Connection Steel:

		Fy, psi	ASTM
1. Welded bars		60,000	A615*
	OR	60,000	A706
2. All bars, UN		60,000	A615
3. Welded wire reinforcement (smooth)		65,000	A185
4. Prestressing strand		270,000 (fpu)	A416
5. Coil bolts and coil rods		65,000 U.N.	
6. Welding for steel reinf.			AWS D1.4-05
7. Deformed bar anchors		70,000	A496
8. Headed anchor studs		60,000 (fs)	A108
9. Headed/terminator bars		60,000	A970

*with proper reheat per AWS standards.

C. General Notes for Cast-in-Place and Precast Concrete:

1. Column reinforcing shall be continuous, or shall be spliced according to ACI 318-14, Section 25.5.
2. Welded wire reinforcement shall be spliced per ACI 318-14, Section 25.5.4.
3. Provide extra reinforcing around all openings, including door openings: two #5 bars all four sides of each opening and extend 2 feet beyond corners of opening. Add two #5 bars 4 feet long as diagonal bars at each corner.
4. Where shown hooked, provide standard 90 degree bar hooks unless noted.
5. When reinforcement is lap spliced, provide Class B splice typical, unless noted. See details for splice locations.
6. Provide a 3/4 inch chamfer on all exposed corners of concrete. Top edges of walls may be tooled.
7. Provide control/construction joints as shown on Drawings. For more information, see Specification Section 033000.
8. All inserts and coil rods shall be Galvanized. See Specifications Section 033000 for more information.
9. P/C embed shop drawings must be approved and embedded items installed where required prior to placing concrete.
10. Stripping of forms shall be in accordance with Specification Section 033000.

D. Additional Note for Precast Concrete:

1. Parking Structure contract Drawings are based on performance type design for precast superstructure. An integral part of this Project is preparation of final Design Drawings, Design Calculations, and Shop Drawings necessary for fabrication and construction of all precast concrete pieces and required accessories in accordance with all code and design requirements. See Specification Section 034100 for more requirements.
2. Provide all openings, reveals, drips, blockouts, inserts, etc., cast into precast according to Architectural, Mechanical and Electrical Drawings. Coordinate exact sizes and locations with respective Contractor.
3. Provide 2 #4 L bars minimum (3'-0" legs) at each corner of precast panels.
4. See Drawings for protection of embedded metals.
5. Bending requirements for reinforcing bars to be hot-dip galvanized vary slightly from ACI 318. Refer to ASTM A767 referenced in Specification Section 034100.
6. When erecting Precast structure, guy and plumb structure for stability. Guying and bracing shall remain until final stability is achieved. See Specification Section 034100 for information on plumbness.
7. Structure is designed for its final service condition. Contractor shall be responsible for piece design to withstand handling and erection forces, erection sequence, guying, staying, and shoring as required to assure structural stability during construction.
8. For exterior columns, no outward out-of-plumbness tolerance is permitted.
9. Install expansion joints after all guying and bracing has been removed and column plumbness has been measured to be within tolerance.
10. Minimum additional load factor of 1.2 shall be used for design of all superstructure connections unless superseded by seismic requirements of applicable building code. See specifications section 034100 for more information.
11. Floor drainage layout is based on a maximum double tee camber of 1 1/2". Design of P/C double tees shall be such that final in-service camber does not exceed this value. Precast Contractor shall review floor drainage layout and notify Engineer of any discrepancies or constructability issues prior to fabrication.
12. Steel connections providing gravity support either directly or indirectly (such as torsion connections) shall be fireprofed to meet fire rating requirement of supported structural element.

E. Concrete Protection for Reinforcement:

1. Specified concrete protection for reinforcement shall be per ACI 318-14, Section 20.6.
2. For prestressed and non-prestressed reinforcement in prestressed/precast concrete members, specified concrete protection at top members shall be 1-1/2 inches consistent with ACI 362.1R-12, "Guide for the Design of Durable Parking Structures."
3. For reinforcement in cast-in-place concrete, specified concrete protection shall be as follows:

	Concrete Cover (Inches)
a. Footing top reinforcement	2
b. Footing bottom and side reinforcement	3
c. Wall reinforcement #5 bar and smaller	1 1/2
d. Wall reinforcement #6 bar and large	2

F. Epoxy Coating for Reinforcement and Anchors:

1. Epoxy coat all reinforcement in cast-in-place concrete (toppings and pour strips) at supported levels except welded wire reinforcement.
2. For additional information regarding epoxy coating, see Specification Section 033000.

IV. CONCRETE MASONRY

A. Material Properties:

1. Compressive strength of masonry, f'm = 2000 psi.
2. Mortar type "M" or "S".

B. General Concrete Masonry Notes:

1. Provide dowels between foundations and walls equal to size and spacing of vertical wall reinforcing, unless noted otherwise.
2. Minimum reinforcement for masonry wall subject to bumper loads shall be #5 @ 8 in. o.c. for a height of 2 feet 8 inches above floor and grout all block cores solid up to 2 feet 8 inches above floor. Minimum reinforcement for masonry walls not subject to bumper loads shall be #4 @ 48" o.c. plus one #4 verticals at corners, edges of openings, and ends of walls. Grout block cells with reinforcement full.
3. In masonry walls, provide 8-in.-wide bond beam lintels reinforced with two #5 bars continuous unless shown otherwise on Drawings. Concrete block for three courses directly below bond beam bearing and extending out at an angle of 45 degrees shall be solid block or shall be grouted solid, unless noted otherwise.
4. Provide control joints in masonry walls at 20 ft. on center maximum or as noted on Drawings.

V. STRUCTURAL STEEL

		Fy, psi	ASTM
A. Structural Shapes			
1. W-shapes		50,000	A992
2. M-shapes, S-shapes, HP-shapes, channels, angles		36,000	A36
B. Hollow Structural Sections			
1. All shapes		50,000	A1085
C. Steel Pipes		35,000	A53 GR. B
D. Structural Plates and Bars		36,000	A36
E. Bolts			
1. 1/2" dia. to 1" dia., UN		92,000	A325
2. 1-1/8" dia. to 1-1/2" dia. UN		81,000	A325
F. Anchor Rods		36,000	F1554 GR. 36
G. Welding Electrodes		E70XX	AWS D1.1-05

H. General Structural Steel Notes
1. Lintel shall have a minimum end bearing on masonry of 8 inches, but not less than 1 inch of such bearing for each foot of opening.

VI. MISCELLANEOUS

A. For exact sizes and locations of mechanical and electrical items and openings, consult respective subcontractors.

B. See specifications for additional information.

C. Inserts called out on Drawings shall be as designated below for diameters indicated. Nomenclature is for Dayton/Richmond Concrete Accessories.

1. 1/2 inch diameter,	Type B-16	
2. 3/4 inch diameter,	Type F-56,	2 Strut
3. 1 inch diameter,	Type F-56,	2 Strut
4. 1-1/4 inch diameter,	Type F-58	4 Strut

5. Provide coil bolts and rods with necessary penetration into inserts to develop full strength per manufacturer's recommendations.

D. Post-Installed Anchors or Reinforcing Bars

1. Post-installed anchors shall only be used where shown on Construction Documents. Contractor shall obtain approval from Engineer-of-Record prior to installing post-installed anchors or reinforcing bars in place of missing or misplaced cast-in-place anchors or reinforcing bars. Care shall be taken in placing post-installed anchors or reinforcing bars to avoid conflicts with existing rebar. Holes shall be drilled and cleaned in accordance with manufacturer's written instructions. Substitution request for installation other than those shown shall be submitted by Contractor to Engineer-of-Record along with calculations that are prepared and sealed by a registered professional engineer. Calculations shall demonstrate that substituted product is capable of achieving pertinent equivalent performance values (minimum) of specified product using appropriate design procedure and/or standard(s) as required by building code.
   See Specification Section 033000.
   a. Concrete Anchors
      1. Mechanical anchors for use in cracked and uncracked concrete shall have been tested and qualified for use in accordance with ACI 355.2 and ICC-ES AC193.
      2. Adhesive anchors for use in cracked and uncracked concrete shall have been tested and qualified for use in accordance with ACI 355.4 as modified by ICC-ES AC308.
   b. Masonry Anchors
      1. Anchorage to Solid-Grouted Concrete Masonry
         a. Mechanical and concrete screw anchors for use in solid-grouted concrete masonry shall have been tested and qualified for use in accordance with ICC-ES AC01 or AC106, respectively.
         b. Adhesive anchors for use in solid-grouted concrete masonry shall have been tested and qualified for use in accordance with ICC-ES AC58.
      2. Anchorage to Hollow Concrete Masonry/Unreinforced Clay Brick Masonry
         a. Screw anchors for use in hollow concrete masonry shall have been tested and qualified in accordance with ICC-ES AC106.
         b. Adhesive anchors with screen tubes shall be tested and qualified in accordance with ICC-ES AC58 or AC60, as appropriate. Appropriate screen tube shall be used as recommended by adhesive manufacturer.

E. Abbreviations - See Sheet S-002

F. DO NOT SCALE THE DRAWINGS

VII. DEFERRED SUBMITTALS

A. Following items are portions of design that will not be submitted at time of building permit application. Design of these items will be performed and submitted by a specialty contractor during construction phase of project. For information see appropriate Specification Sections related to these items.

1. Earth retention systems
2. Precast concrete elements
3. Light gage framing
4. Structural steel framing connections

B. Engineer of Record shall review deferred submittal drawings and calculations prepared by Contractor and forward them to Building Official with notation indicating deferred submittal documents have been reviewed and found to be in general conformance with design requirements. Deferred submittal items shall not be installed until design and submittal documents have been approved by Building Official.

VIII. CONNECTION COMPONENT COORDINATION

A. Following specifies subcontractor responsible for providing connection components. Where connections occur between two different trades, Construction Manager shall coordinate between the two subcontractors as required to locate and install these items. Refer to specifications for additional information.

B. Embedded plates in precast concrete elements shall be provided by precast contractor. CM shall coordinate between precast contractor and appropriate subcontractor to locate embedded plates as necessary.

C. Precast-to-precast steel connection and bearing components, including angles, tubes and other steel shapes as required by design, shall be provided by precast contractor. Where coating is removed or damaged during installation, precast contractor shall repair coating in field.

D. Structural steel-to-structural steel connection components shall be provided by structural steel contractor. Where coating is removed or damaged during installation, structural steel contractor shall repair coating in field.

E. Planter components shall be provided by miscellaneous metals contractor. Where coating is removed or damaged during installation, miscellaneous metals contractor shall repair coating in field.

F. Structural steel-to-precast connection components shall be provided by structural steel contractor. Embedded plates (where required) in precast for connection shall be provided by precast contractor. Where coating is removed or damaged during installation, structural steel contractor shall repair coating in field.

G. Precast concrete-to-cast-in-place concrete connection components, including angles, shall be provided by precast contractor. Where coating is removed or damaged during installation, precast contractor shall repair coating in field.

H. Clip angles, plates and connection components for CMU wall to concrete elements shall be provided by miscellaneous metals contractor. CM shall coordinate connections between miscelaneous metals contractor and CIP or P/C contractor as appropriate. Where coating is removed or damaged during installation, miscellaneous metals contractor shall repair coating in field.

IX. TESTING & INSPECTION NOTES

A. Following test and inspections shall be performed by an independent testing and inspection agency employed by Owner and approved by Engineer and Building Official. Test and inspection reports shall be submitted for approval to Engineer and Building Official. Conform to requirements of IBC section 109 and 1704.

SPECIAL INSPECTIONS SCHEDULE

REQUIRED VERIFICATION & INSPECTION			CONT	PERIODIC
A. CONCRETE CONSTRUCTION				
1.		Inspection of reinforcing steel, including prestressing tendons, and placing		X
2.		Inspection of reinforcing steel welding:		
	a.	Verification of weldability of reinforcing steel other than ASTM A706		X
	b.	Reinforcing steel resisting flexural and axial forces in intermediate and special moment frames, and boundary elements of special reinforced concrete shear walls	X	
	c.	Shear reinforcement	X	
	d.	Other reinforcing steel		X
	e.	Bumper wall reinforcing	X	
3.		Inspection of bolts to be installed in concrete prior to and during placement of concrete where allowable loads have been increased or where strength design is used	X	
4.		Inspection of anchors installed in hardened concrete		X
5.		Verifying use of required design mix		X
6.		Perform sampling and testing of concrete according to specifications	X	
7.		Inspection of concrete and shotcrete placement for proper application techniques	X	
8.		Inspection for maintenance of specified curing temperature and techniques		X
9.		Verification of in-situ concrete strength, prior to stressing of tendons in post-tensioned concrete and prior to removal of shores and forms from beams and structural slabs		X
10.		Inspect formwork for shape, location and dimensions of concrete member being formed		X
11.		Verify finish of concrete slabs and floors (see specification section 033000)		X
12.		Verify location and construction of pour strips and joints in concrete slabs and floors (see specification section 033000 and structural drawings)		X
B. PRECAST CONCRETE				
1.		Erection of precast concrete members		X
2.		Verification of precast member connections in accordance with structural drawings and precast construction (shop) drawings		X
C. STEEL CONSTRUCTION				
1.		Material verification of high-strength bolts, nuts, and washers:		
	a.	Identification markings to conform to ASTM standards specified in construction documents		X
	b.	Manufacturer's certificate of compliance required		X
2.		Inspection of high-strength bolting:		
	a.	Bearing-type connections		X
	b.	Slip-critical connections (see IBC 1704.3.3)	X	X
3.		Material verification of structural steel:		
	a.	Identification markings to conform to ASTM standards in approved construction documents		X
	b.	Manufacturer's certified mill test reports		X
4.		Material verification of weld filler materials:		
	a.	Identification markings to conform to AWS specification in approved construction documents		X
	b.	Manufacturer's certificate of compliance required		X
5.		Inspection of structural steel welding:		
	a.	Complete and partial penetration groove welds	X	
	b.	Multi-pass fillet welds	X	
	c.	Single-pass fillet welds > 5/16"	X	
	d.	Single-pass fillet welds ≤ 5/16"		X
	e.	Floor and deck welds		X
6.		Inspection of steel frame joint details for compliance with construction documents:		
	a.	Details such as bracing and stiffening		X
	b.	Member locations		X
	c.	Application of joint details at each connection		X
D. MASONRY CONSTRUCTION (SEE IBC SECTION 1704.5.2)				
1.		Verification of slump flow and VSI as delivered to the site for self-consolidating grout	X	
2.		Verification of masonry construction		
	a.	Proportions of site-prepared mortar		X
	b.	Construction of mortar joints		X
	c.	Location of reinforcement, connectors, and anchorages		X
3.		During construction the inspection program shall verify:		
	a.	Size and location of structural elements		X
	b.	Type, size, and location of anchors, including other details of anchorage of masonry to structural members, frames, or other construction		X
	c.	Specified size, grade, and type of reinforcement, anchor bolts, and anchorages		X
	d.	Preparation, construction and protection of masonry during cold weather (temperature below 40°F) or hot weather (temperature above 90°F)		X
4.		Prior to grouting, the following shall be verified to ensure compliance:		
	a.	Grout space is clean		X
	b.	Placement of reinforcement and connectors, and anchorages		X
	c.	Construction of mortar joints		X
5.		Preparation of any required grout specimens, mortar specimens and/or prisms shall be observed		X
E. SOILS				
1.		Verify materials below footings are adequate to achieve design bearing capacity		X
2.		Verify excavations are extended to proper depth and have reached proper material		X
3.		Perform classification and testing of controlled fill materials		X
4.		Verify use of proper materials, densities, and lift thicknesses during placement and compaction of controlled fill	X	
5.		Prior to placement of controlled fill, observe subgrade and verify that site has been prepared properly		X
H. MISCELLANEOUS ITEMS				
1.		Verify installation of expansion joints, traffic topping membranes, and joint sealants		X
2.		Verify attachment and/or bracing of miscellaneous items such as pipes, equipment, signs, bollards, etc.		X

PRIME DESIGNER
WALKER CONSULTANTS
2895 Greenspoint Parkway, Suite 600
Hoffman Estates IL 60169
847.697.2640 Ph
www.walkerconsultants.com

ARCHITECTURAL
Studio Level 1
STUDIO LEVEL 1
1001 North Warren Street
Gary, IN 46403
219.951.0214 Ph
www.studiolevel1.com

PRELIMINARY - DO NOT USE FOR CONSTRUCTION

MAPLE STREET
PARKING DECK

MOUNT PROSPECT, IL

MARK	DATE	DESCRIPTION
		REVISIONS

SHEET ISSUE:	95% CONSTRUCTION DOCUMENTS
SHEET ISSUE DATE:	10/18/2019
PROJECT NO:	31-8504.00
DRAWN BY:	JVK
CHECKED BY:	DJM

COPYRIGHT © 2019. ALL RIGHTS RESERVED. NO PART OF THIS DOCUMENT MAY BE REPRODUCED IN ANY FORM OR BY ANY MEANS WITHOUT PERMISSION FROM WALKER CONSULTANTS.

SHEET TITLE:
GENERAL NOTES

S-001

10/17/2019 8:34:12 AM C:\Revit Projects\31-8504.00-MAPLE STREET PG-STRUCT_R19_jvkappel.rvt

ABBREVIATIONS

ABBRV	TERM
A/E	ARCHITECT/ENGINEER
AB	ANCHOR BOLT
ABBRV	ABBREVIATION
ACI	AMERICAN CONCRETE INSTITUTE
ADDM	ADDENDUM
AISC	AMERICAN INSTITUTE OF STEEL CONSTRUCTION
ALT	ALTERNATE
ALUM	ALUMINUM
ANSI	AMERICAN NATIONAL STANDARDS INSTITUTE
APPROX	APPROXIMATE
ARCH	ARCHITECT
ASCE	AMERICAN SOCIETY OF CIVIL ENGINEERS
ASI	ARCHITECT'S SUPPLEMENTAL INSTRUCTION
ASTM	AMERICAN SOCIETY FOR TESTING AND MATERIALS
AVG	AVERAGE
AWS	AMERICAN WELDING SOCIETY
B	BEAM
B PL	BASE PLATE
BC	BACK OF CURB
BC	BOLT CIRCLE
BLDG	BUILDING
BOS	BOTTOM OF STEEL
BOT	BOTTOM
BRG	BEARING
BRG PL	BEARING PLATE
BS	BOTH SIDES
BTWN	BETWEEN
C	C SHAPE
C TO C	CENTER TO CENTER
CAM	CAMBER
CANTIL	CANTILEVER
CD	CONSTRUCTION DOCUMENTS
CERT	CERTIFY
CG	CENTER OF GRAVITY
CHFR	CHAMFER
CIP	CAST-IN-PLACE
CJ	CONSTRUCTION JOINT
CJ	CONTROL JOINT
CL	CENTER LINE
CLR	CLEAR
CMU	CONCRETE MASONRY UNIT
COL	COLUMN
CONC	CONCRETE
CONN	CONNECT
CONN	CONNECTION
CONSTR	CONSTRUCTION
CONT	CONTINUE
CONT	CONTINUOUS
CONTR	CONTRACTOR
COORD	COORDINATE
CP	CONCRETE PIER
CRSI	CONCRETE REINFORCING STEEL INSTITUTE
CTR	CENTER
CU YD	CUBIC YARD
D	DEEP
D	DEPTH
DAT	DATUM
DBA	DEFORMED BAR ANCHOR
DD	DESIGN DEVELOPMENT
DEG	DEGREE
DET	DETAIL
DEV	DEVELOPMENT
DIA	DIAMETER
DIAG	DIAGONAL
DL	DEAD LOAD
DOC	DOCUMENT
DP	DRILLED PIER
DWG	DRAWING
E	MODULUS OF ELASTICITY
EA	EACH
EE	EACH END
EF	EACH FACE
EJ	EXPANSION JOINT
EL	ELEVATION
ELEV	ELEVATOR
ENGR	ENGINEER
EOS	EDGE OF SLAB
EQ	EQUAL
EQ	SEISMIC
EQUIP	EQUIPMENT
EQUIV	EQUIVALENT
ETC	AND SO FORTH
EW	EACH WAY
EW EF	EACH WAY EACH FACE
EWP	ELEVATION WORKING POINT
EXIST	EXISTING
EXP	EXPANSION
EXT	EXTERIOR
F	FAHRENHEIT
FD	FLOOR DRAIN
FDTN	FOUNDATION
FF	FAR FACE
FIN	FINISH
FIN FLR	FINISH FLOOR
FLG	FLANGE
FLR	FLOOR
FO	FINISHED OPENING
FS	FAR SIDE
FT	FEET
FT	FOOT
FT-K	FOOT-KIPS
FT-LB	FOOT-POUNDS
FUT	FUTURE
G	GIRDER
GA	GAGE
GALV	GALVANIZED
GALV STL	GALVANIZED STEEL
GC	GENERAL CONTRACTOR
GFRC	GLASS-FIBER-REINFORCED CONCRETE
GR	GRADE
GR BM	GRADE BEAM
H	HIGH
HC	HOLLOW CORE
HORIZ	HORIZONTAL
HP	HP-STEEL SECTION
HSS	HOLLOW STRUCTURAL STEEL SECTION
HST	HOIST
HT	HEIGHT
HVAC	HEATING, VENTILATING, AND AIR CONDITIONING
I	MOMENT OF INERTIA
IBC	INTERNATIONAL BUILDING CODE
ID	INSIDE DIAMETER
IF	INSIDE FACE
IN-K	INCH-KIPS
IN-LB	INCH-POUND
INFO	INFORMATION
INT	INTERIOR
INV	INVERT
INV EL	INVERT ELEVATION
ISO	ISOMETRIC
K	KIP(S)
KLF	KIPS PER LINEAL FOOT
KSF	KIPS PER SQUARE FOOT
KSI	KIPS PER SQUARE INCH
KWY	KEYWAY

ABBREVIATIONS

ABBRV	TERM
L	ANGLE
LAT	LATITUDE
LBS	POUND
LF	LINEAR FEET (FOOT)
LL	LIVE LOAD
LLH	LONG LEG HORIZONTAL
LLV	LONG LEG VERTICAL
LONG	LONGITUDINAL
LP	LIGHT POLE
LT GA	LIGHT GAGE
LT WT	LIGHTWEIGHT
LYR	LAYER
M	M-STEEL SHAPE
M	MOMENT
MAX	MAXIMUM
MECH	MECHANICAL
MECH RM	MECHANICAL ROOM
MFR	MANUFACTURER
MH	MANHOLE
MID	MIDDLE
MIN	MINIMUM
MISC	MISCELLANEOUS
MO	MASONRY OPENING
MT	MT-STEEL SHAPE
N	NORTH
NA	NOT APPLICABLE
NF	NEAR FACE
NIC	NOT IN CONTRACT
NO	NUMBER
NOM	NOMINAL
NS	NEAR SIDE
NSNM	NON-SHRINK NON-METALLIC
NTS	NOT TO SCALE
O/O	OUT TO OUT
OC	ON CENTER
OD	OUTSIDE DIAMETER
OF	OUTSIDE FACE
OPH	OPPOSITE HAND
OPNG	OPENING
OPP	OPPOSITE
ORIG	ORIGINAL
P	AXIAL LOAD
P/C	PRECAST
P/T	POST TENSIONED
PC	PILE CAP
PCF	POUNDS PER CUBIC FOOT
PCI	PRECAST/PRESTRESSED CONCRETE INSTITUTE
PL	PROPERTY LINE
PLF	POUNDS PER LINEAR FOOT
PRCST	PRECAST
R	RADIUS
RC	REINFORCED CONCRETE
RD	ROOF DRAIN
REBAR	REINFORCING STEEL BARS
REF	REFERENCE
REINF	REINFORCEMENT
REM	REMAINDER
REM	REMAINING
REQD	REQUIRED
REV	REVISION
RO	ROUGH OPENING
ROW	RIGHT OF WAY
S	SECTION MODULUS
SCHED	SCHEDULE
SDI	STEEL DECK INSTITUTE
SE	STRUCTURAL ENGINEER
SECT	SECTION
SF	SQUARE FOOT (FEET)
SHT	SHEET
SIM	SIMILAR
SJI	STEEL JOIST INSTITUTE
SOG	SLAB ON GROUND
SPEC	SPECIFICATION
SST	STAINLESS STEEL
STAG	STAGGERED
STD	STANDARD
STIF	STIFFENER
STIR	STIRRUP
STL PL	STEEL PLATE
STRUCT	STRUCTURAL
SYM	SYMMETRICAL
SYS	SYSTEM
T	TORSION
T&B	TOP AND BOTTOM
TD	TRENCH DRAIN
TEMP	TEMPORARY
TFF	TOP OF FINISH FLOOR
THRU	THROUGH
TO CP	TOP OF CONCRETE PIER
TO DP	TOP OF DRILLED PIER
TO FDTN	TOP OF FOUNDATION
TO P/C	TOP OF PRECAST
TO PC	TOP OF PILE CAP
TOB	TOP OF BEAM
TOC	TOP OF CONCRETE
TOF	TOP OF FOOTING
TOF	TOP OF FOUNDATION
TOS	TOP OF SLAB
TOS	TOP OF STEEL
TOW	TOP OF WALL
TRANS	TRANSVERSE
TS	TUBE STEEL
TYP	TYPICAL
UL	UNDERWRITERS LABORATORIES
ULT	ULTIMATE
UN	UNLESS NOTED
UNIF	UNIFORM
UNO	UNLESS NOTED OTHERWISE
V	SHEAR
VAR	VARIES
VERT	VERTICAL
VIF	VERIFY IN FIELD
VRFY	VERIFY
W	W-STEEL SHAPE
W	WIDE
W/	WITH
W/O	WITHOUT
WF	WIDE FLANGE
WL	WIND LOAD
WP	WORKING POINT
WT	WEIGHT
WT	WT-STEEL SHAPE
WWR	WELDED WIRE REINFORCEMENT
X BRACE	CROSS BRACE
YD	YARD
Z	MODULUS OF SECTION

STRUCTURAL GENERAL LEGEND

- CIP
- CIP (PLAN CUT)
- PRECAST CONCRETE
- CMU
- CONCRETE WASH ON PRECAST CONCRETE
- CIP POUR STRIP
- TRAFFIC TOPPING
- (1) SHEET NOTE

PRELIMINARY - DO NOT USE FOR CONSTRUCTION

PRIME DESIGNER

WALKER CONSULTANTS

2885 Greenspoint Parkway, Suite 600
Hoffman Estates IL 60169
847.697.2640 Ph
www.walkerconsultants.com

ARCHITECTURAL

Studio Level 1

STUDIO LEVEL 1
1001 North Warren Street
Gary, IN 46403
219.951.0214 Ph
www.studiolevel1.com

Mount Prospect

MAPLE STREET
PARKING DECK

MOUNT PROSPECT, IL

MARK	DATE	DESCRIPTION

REVISIONS

SHEET ISSUE:	95% CONSTRUCTION DOCUMENTS
SHEET ISSUE DATE:	10/16/2019
PROJECT NO:	31-8504.00
DRAWN BY:	JVK
CHECKED BY:	DJM

COPYRIGHT © 2019. ALL RIGHTS RESERVED. NO PART OF THIS DOCUMENT MAY BE REPRODUCED IN ANY FORM OR BY ANY MEANS WITHOUT PERMISSION FROM WALKER CONSULTANTS.

SHEET TITLE:
ABBREVIATIONS AND LEGENDS

S-002

10/17/2019 8:34:16 AM C:\Revit Projects\31-8504.00-MAPLE STREET PG-STRUCT_R19_jvkappel.rvt

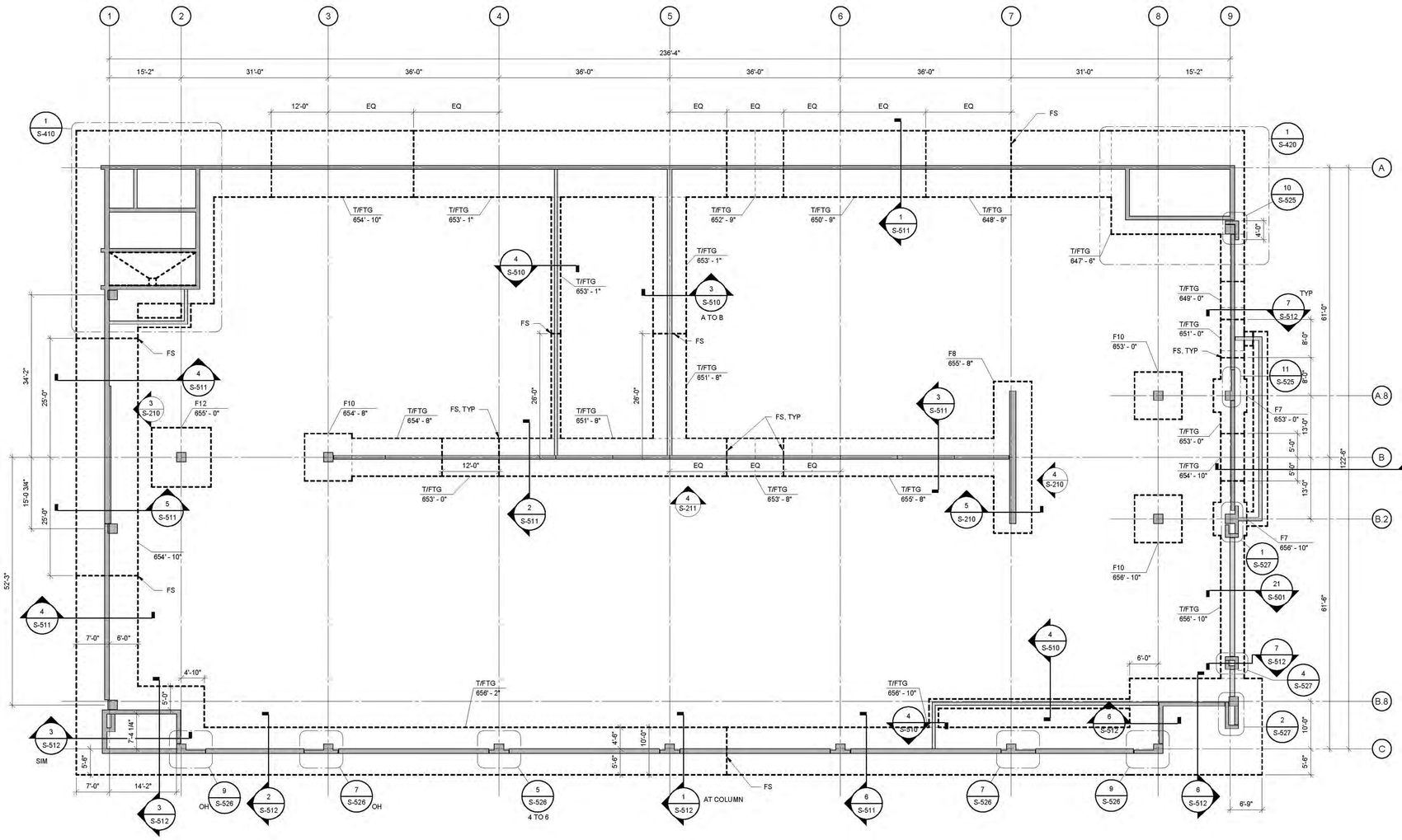

1 FOUNDATION PLAN

3/32" = 1'-0"

SPREAD FOOTING SCHEDULE								
	SIZE			REINFORCING				
				LONGITUDINAL		TRANSVERSE		
MARK	LENGTH	WIDTH	DEPTH	BOTTOM	TOP	BOTTOM	TOP	REMARKS
F7	7' - 0"	7' - 0"	2' - 6"	(7) #8	-	(7) #8	-	
F8	32' - 0"	8' - 0"	2' - 6"	(8) #7	(8) #7	(32) #7	(32) #7	
F10	10' - 0"	10' - 0"	2' - 6"	(10) #8	-	(10) #8	-	
F12	12' - 6"	12' - 6"	2' - 6"	(12) #8	-	(12) #8	-	

FOOTING NOTES:

FN1. ALL REINFORCEMENT SHALL BE PLACED AT EVEN SPACING, UNLESS NOTED.
FN2. MINIMUM SOIL BEARING CAPACITY SHALL BE 4,000 PSF AS VERIFIED BY TESTING AGENCY.
FN3. IF REQUIRED BY GEOTECHNICAL ENGINEER, OVEREXCAVATE AND EXTEND FOOTINGS TO SOILS OF ADEQUATE BEARING CAPACITY. ALTERNATIVELY, POOR SOILS MAY BE REMOVED AND REPLACED WITH ENGINEERED FILL OR LEAN CONCRETE.
FN4. FULLY DEVELOP CONTINUOUS FOOTINGS INTO ADJACENT FOOTINGS. SEE S-650 FOR DEVELOPMENT LENGTHS.
FN5. PLACE LONGITUDINAL BARS BELOW TRANSVERSE BARS FOR BOTTOM BARS.

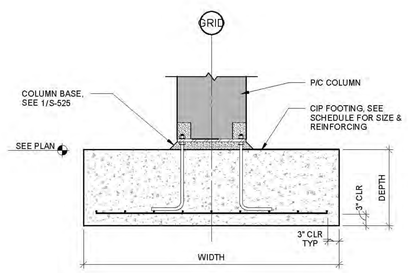

NOTE:
1. PRECAST COLUMN TO FOOTING SHOWN. SEE DETAILS FOR OTHER ELEMENTS.

3 COLUMN/FOOTING DETAIL

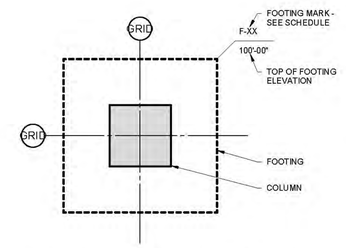

2 FOUNDATION LEGEND

SHEET NOTES

1. REFER TO SHEET S-001 FOR GENERAL NOTES.
2. PROVIDE 3" CLEAR COVER FOR ALL BOTTOM REINFORCEMENT AND 2" CLEAR COVER FOR ALL TOP REINFORCEMENT, UNLESS NOTED.
3. AT LOCATIONS WHERE PRECAST WALLS ARE SUPPORTED ON FOUNDATIONS, PROVIDE EMBEDDED PLATES IN FOUNDATIONS. COORDINATE WITH PRECAST SUPPLIER.
4. ANCHOR BOLTS, PLATES WITH WELDED ANCHORS, REINFORCING BAR CAGES WITH NMB SPLICES (OR SIMILAR) OR ANY OTHER CONNECTION MATERIALS THAT CONNECT THE PRECAST CONCRETE MEMBERS TO THE CIP CONCRETE FOUNDATIONS ARE TO BE SUPPLIED BY THE PRECAST SUPPLIER AND INSTALLED BY THE GENERAL CONTRACTOR. WARNING TO GENERAL CONTRACTOR: COORDINATE WITH PRECAST SUPPLIER TO FULLY UNDERSTAND THE LARGE MAGNITUDE OF THE EMBEDS TO BE INSTALLED AND THE VERY TIGHT TOLERANCES REQUIRED.
5. THE GENERAL CONTRACTOR IS RESPONSIBLE FOR THE DESIGN AND CONSTRUCTION OF ALL TEMPORARY EXCAVATION BRACING, SHEETING AND SHORING.
6. COORDINATE PENETRATIONS IN FOUNDATIONS & PRECAST MEMBERS WITH MEP AND CIVIL DRAWINGS. SHOW PENETRATIONS ON ALL SHOP DRAWINGS.
7. ALL COLUMNS ARE CENTERED ON GRID UNLESS NOTED.
8. FOR UTILITIES NEAR FOUNDATIONS, SEE 2/S-510.
9. SEE CIVIL DRAWINGS FOR EXTERIOR GRADES, UTILITIES, ADJACENT STRUCTURES AND PROPERTY LINES. NOTIFY ENGINEER OF ANY CONFLICTS IMMEDIATELY.
10. VERIFY ALL DIMENSIONS WITH ARCHITECTURAL DRAWINGS.
11. SEE DRAWING S-101 FOR GRADE SLAB AND SUBGRADE INFORMATION.
12. FOR ANCHOR BOLT REQUIREMENTS, SEE 1/S-525.
13. CONTRACTOR TO PROTECT SUBGRADE FROM DAMAGE DUE TO WEATHER.
14. GENERAL CONTRACTOR AND HIS SUB-CONSULTANTS SHALL REVIEW THE GEOTECHNICAL REPORT AND MAKE HIMSELF FAMILIAR WITH THE CONTENT OF THE REPORT AND THE INTENT OF THE GEOTECHNICAL ENGINEER BEFORE PROCEEDING WITH THE WORK.
15. ALL WORK MUST BE COORDINATED WITH THE UNDERGROUND PLUMBING AND ELECTRICAL WORK. GENERAL CONTRACTOR SHALL COORDINATE LOCATION OF ALL SLEEVES AND BLOCKOUTS REQUIRED FOR VARIOUS TRADES.
16. "F" INDICATES SPREAD FOOTING. SEE THIS SHEET FOR FOOTING SCHEDULE.
17. "FS INDICATES FOOTING STEP. SEE DETAIL 1/S-510.
18. UNLESS OTHERWISE NOTED, TOP OF WALL FOOTING ELEVATION EQUALS TOP OF ADJACENT COLUMN FOOTING OR STAIR TOWER MAT FOOTING.
19. INSTALL PERFORATED PLASTIC OR METAL DRAIN LINE AT THE BASE OF ALL EXTERIOR WALLS. PROVIDE A 2'-0" WIDE LAYER OF GRANULAR FREE-DRAINING BACKFILL IMMEDIATELY BEHIND ALL EXTERIOR WALLS.
20. CONTINUOUS WATERPROOFING SPECIFIED IN FOUNDATION WALL SECTIONS TO BE COLD-APPLIED, SINGLE-COMPONENT POLYURETHANE WATERPROOFING.

PRELIMINARY - DO NOT USE FOR CONSTRUCTION

PRIME DESIGNER

WALKER CONSULTANTS
2895 Greenspoint Parkway, Suite 600
Hoffman Estates IL 60169
847.697.2640 Ph
www.walkerconsultants.com

ARCHITECTURAL

Studio Level 1
STUDIO LEVEL 1
1001 North Warren Street
Gary, IN 46403
219.951.0214 Ph
www.studiolevel1.com

Mount Prospect

MAPLE STREET
PARKING DECK

MOUNT PROSPECT, IL

MARK	DATE	DESCRIPTION
REVISIONS		

SHEET ISSUE:	95% CONSTRUCTION DOCUMENTS
SHEET ISSUE DATE:	10/16/2019
PROJECT NO:	31-8504.00
DRAWN BY:	JVK
CHECKED BY:	DJM

COPYRIGHT © 2019. ALL RIGHTS RESERVED. NO PART OF THIS DOCUMENT MAY BE REPRODUCED IN ANY FORM OR BY ANY MEANS WITHOUT PERMISSION FROM WALKER CONSULTANTS.

SHEET TITLE:
FOUNDATION PLAN

S-100

10/17/2019 6:34:20 AM C:\Revit Projects\31-8504.00-MAPLE STREET PG-STRUCT_R19_jvkappel.rvt

SHEET NOTES

1. REFER TO SHEETS S-001 FOR GENERAL NOTES.
2. REFER TO SHEET S-501 FOR TYPICAL DETAILS.
3. SEE DETAIL 3/S-102 FOR PLAN ELEVATION KEY.
4. REFER TO CIVIL DRAWINGS FOR EXTERIOR GRADE ELEVATIONS.
5. REFER TO ARCHITECTURAL DRAWINGS FOR ENTRY / EXIT PLANS.
6. REFER TO S-410 SERIES DRAWINGS FOR STAIR PLANS AND SECTIONS.
7. REFER TO PLUMBING DRAWINGS FOR FLOOR DRAIN LOCATIONS AND DETAILS.
8. VERIFY ALL DIMENSIONS WITH ARCHITECTURAL DRAWINGS.
9. VERIFY ALL TOP OF SLAB ELEVATIONS AND LOCATION OF OPENINGS AND SIZES OF OPENINGS WITH ARCHITECTURAL DRAWINGS.
10. PRIOR TO THE START OF CONSTRUCTION, CONTRACTOR TO COMPLETELY REMOVE EXISTING BUILDING FOUNDATIONS AND/OR BASEMENT FLOOR SLABS AND ASPHALT PAVEMENT WITHIN GARAGE FOOTPRINT AND FOUNDATION LIMITS.
11. PRIOR TO PLACEMENT OF SLAB ON GROUND, CONTRACTOR TO REMOVE EXISTING FILL SOILS AS NECESSARY AND REPLACE WITH COMPACTED ENGINEERED FILL. SEE GEOTECHNICAL REPORT FOR MORE INFORMATION.
12. TYPICAL CONCRETE INTERIOR SLAB ON GROUND SHALL BE 5" THICK AND REINFORCED WITH WITH 4 x 4 x W4 x W4 WWR PLACED 2" CLEAR FROM TOP OF SLAB AND WITH POLYPROPYLENE FIBERS. SLAB TO BE PLACED ON 6" (MIN) IMPORTED GRANULAR MATERIAL, PLACED AND COMPACTED AS RECOMMENDED IN THE GEOTECHNICAL REPORT.
13. PROVIDE AN UNDERSLAB DRAINAGE SYSTEM BENEATH THE SLAB-ON-GROUND. SEE THE GEOTECHNICAL REPORT FOR ADDITIONAL INFORMATION.
14. PROVIDE 1/2" JOINT FILLER AT GRADE SLAB AROUND COLUMNS, TYPICAL. SEE DETAIL 18/S-501. SEE GEOTECHNICAL REPORT FOR ADDITIONAL REQUIREMENTS FOR GRADE SLAB CONSTRUCTION.
15. USE STRAIGHT LINE INTERPOLATION FOR FLOOR ELEVATION BETWEEN THOSE INDICATED.
16. PROVIDE CONSTRUCTION OR CONTROL JOINTS IN CIP WALLS PER 4/S-501 OR 5/S-501 TO MATCH JOINT IN SLAB-ON-GROUND.
17. PROVIDE CORNER REINFORCEMENT FOR CIP WALLS, FOOTING AND GRADE BEAMS PER 9/S-501 OR 10/S-501 AS REQUIRED.
18. FOLLOW THE GEOTECHNICAL REPORT REFERENCED IN THE GENERAL NOTES FOR GENERAL CONSTRUCTION RECOMMENDATIONS.
19. SEE DETAIL 7 & 8/S-510 FOR CMU LINTEL SCHEDULE.
20. ADJUST TOPPING THICKNESS BETWEEN THE COLUMN FACE AND THE FLOOR DRAIN TO PROVIDE POSITIVE DRAINAGE. TYPICAL AT ALL FLOOR DRAIN LOCATIONS.

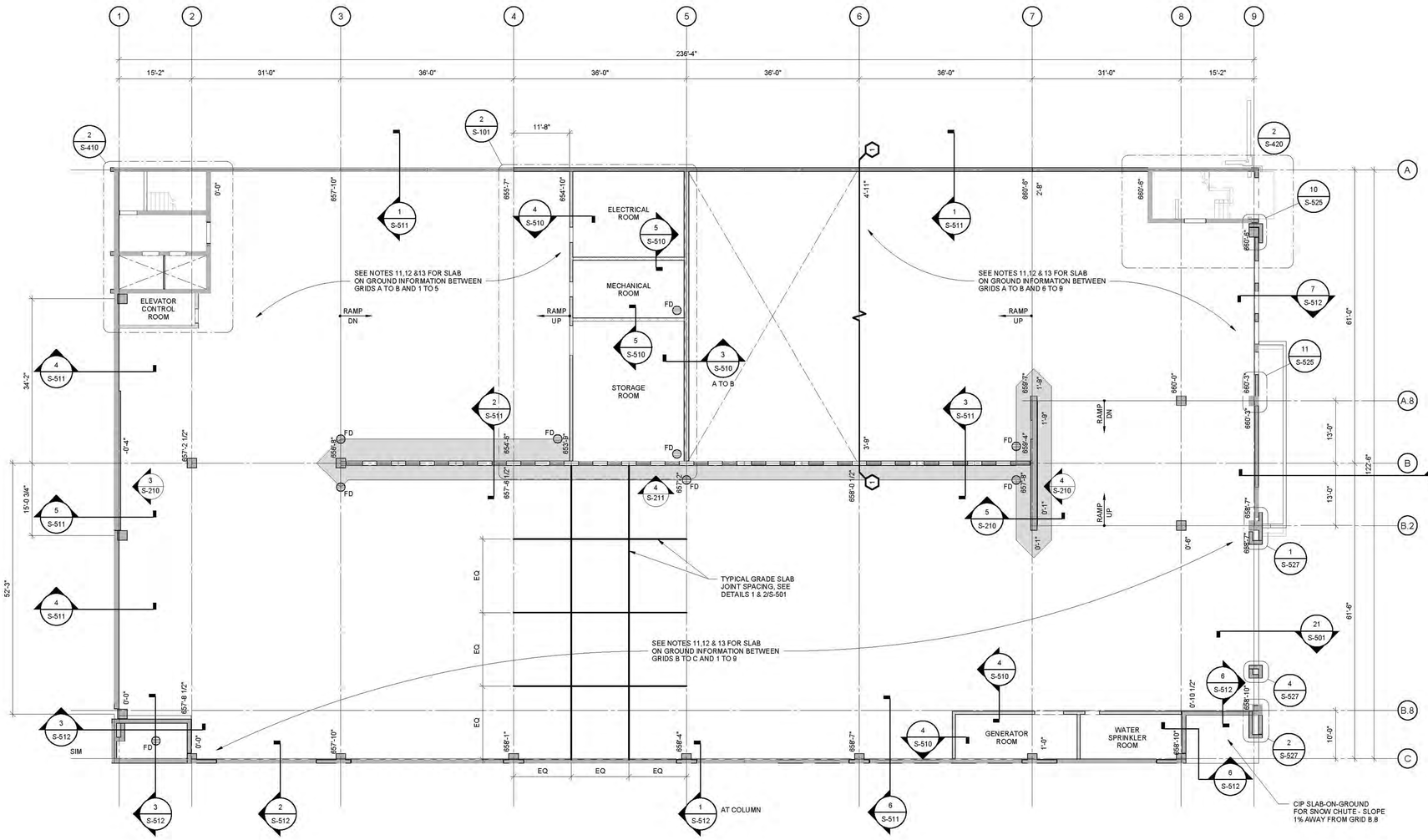

1 GROUND TIER PLAN

3/32" = 1'-0"

IT SHALL BE THE CONTRACTOR'S RESPONSIBILITY TO VERIFY THAT THERE IS A MINIMUM OF 8'-6" HEADROOM BETWEEN ALL DRIVING SURFACES AND OVERHEAD BEAMS PRIOR TO PLACING CONCRETE.

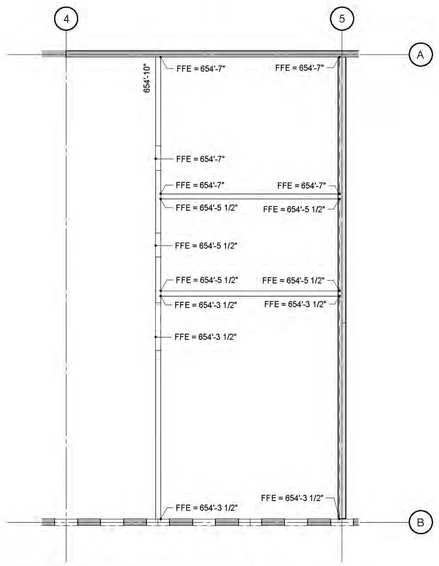

2 ENLARGED ROOM PLANS

1/8" = 1'-0"

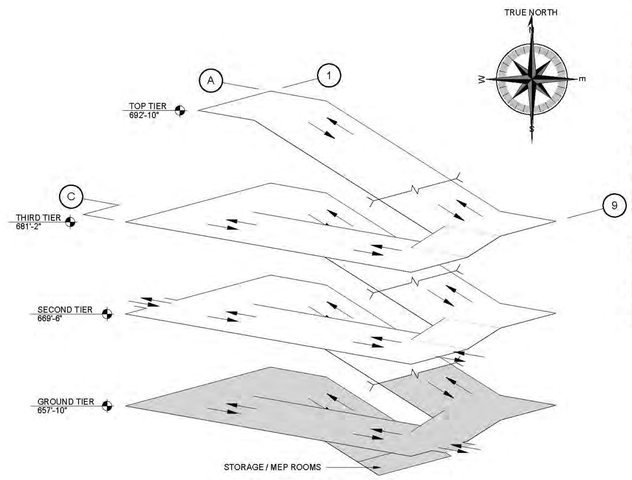

ISOMETRIC

PRIME DESIGNER

WALKER CONSULTANTS

2885 Greenspoint Parkway, Suite 600
Hoffman Estates IL 60169
847.697.2640 Ph
www.walkerconsultants.com

ARCHITECTURAL

Studio Level 1

STUDIO LEVEL 1
1001 North Warren Street
Gary, IN 46403
219.951.0214 Ph
www.studiolevel1.com

PRELIMINARY - DO NOT USE FOR CONSTRUCTION

Mount Prospect

MAPLE STREET
PARKING DECK

MOUNT PROSPECT, IL

MARK	DATE	DESCRIPTION
		REVISIONS
SHEET ISSUE:		95% CONSTRUCTION DOCUMENTS
SHEET ISSUE DATE:		10/16/2019
PROJECT NO:		31-8504.00
DRAWN BY:		JVK
CHECKED BY:		DJM

COPYRIGHT © 2019. ALL RIGHTS RESERVED. NO PART OF THIS DOCUMENT MAY BE REPRODUCED IN ANY FORM OR BY ANY MEANS WITHOUT PERMISSION FROM WALKER CONSULTANTS.

SHEET TITLE:
GROUND TIER PLAN

S-101

10/17/2019 8:34:26 AM C:\Revit Projects\31-8504.00-MAPLE STREET PG-STRUCT_R19_jvkeppel.rvt

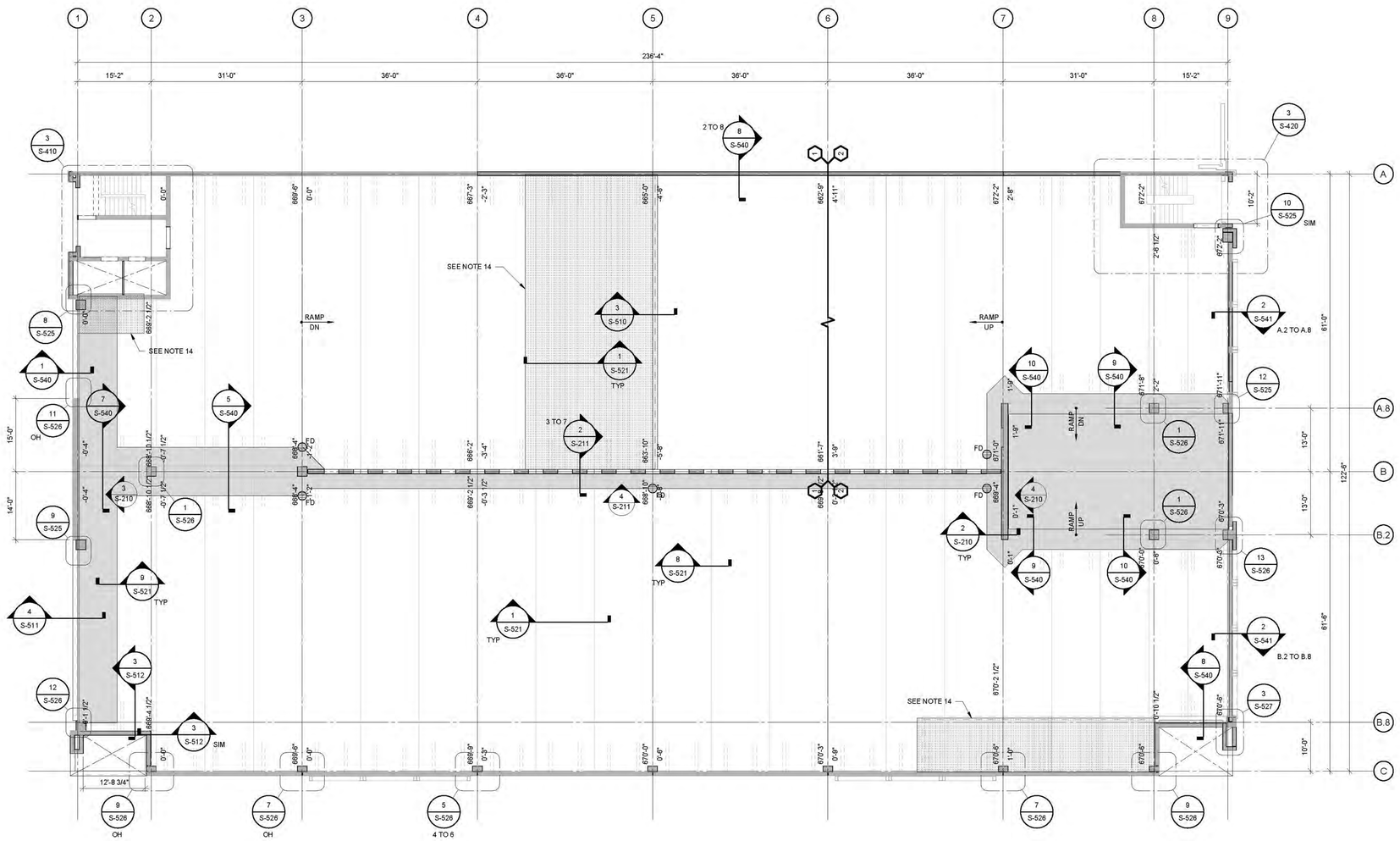

SHEET NOTES

1. REFER TO SHEETS S-001 FOR GENERAL NOTES.
2. REFER TO SHEET S-501 FOR TYPICAL DETAILS.
3. SEE DETAIL 3/S-101 FOR PLAN ELEVATION KEY.
4. REFER TO CIVIL DRAWINGS FOR EXTERIOR GRADE ELEVATIONS.
5. REFER TO ARCHITECTURAL DRAWINGS FOR ENTRY / EXIT PLANS.
6. REFER TO S-410 SERIES DRAWINGS FOR STAIR PLANS AND SECTIONS.
7. REFER TO PLUMBING DRAWINGS FOR FLOOR DRAIN LOCATIONS AND DETAILS.
8. VERIFY ALL DIMENSIONS WITH ARCHITECTURAL DRAWINGS.
9. VERIFY ALL TOP OF SLAB ELEVATIONS AND LOCATION OF OPENINGS AND SIZES OF OPENINGS WITH ARCHITECTURAL DRAWINGS.
10. SEE SHEET S-102 FOR TYPICAL PRECAST SHEET NOTES AND LOCATIONS OF TYPICAL PRECAST DETAIL REFERENCES (UNLESS NOTED).
11. PRIOR TO THE START OF CONSTRUCTION, CONTRACTOR TO COMPLETELY REMOVE EXISTING BUILDING FOUNDATIONS AND/OR BASEMENT FLOOR SLABS AND ASPHALT PAVEMENT WITHIN GARAGE FOOTPRINT AND FOUNDATION LIMITS.
12. PRIOR TO PLACEMENT OF SLAB ON GROUND, CONTRACTOR TO REMOVE EXISTING FILL SOILS AS NECESSARY AND REPLACE WITH COMPACTED ENGINEERED FILL. SEE GEOTECHNICAL REPORT FOR MORE INFORMATION.
13. TYPICAL CONCRETE INTERIOR SLAB ON GROUND SHALL BE 5" THICK AND REINFORCED WITH WITH 4 x 4 x W4 x W4 WWR PLACED 2" CLEAR FROM TOP OF SLAB AND WITH POLYPROPYLENE FIBERS. SLAB TO BE PLACED ON 6" (MIN) IMPORTED GRANULAR MATERIAL, PLACED AND COMPACTED AS RECOMMENDED IN THE GEOTECHNICAL REPORT.
14. ▨ INDICATES HEAVY DUTY TRAFFIC TOPPING MEMBRANE. EXTEND 1'-0" BEYOND LIMITS OF ROOM BELOW, UNLESS NOTED OTHERWISE.
15. ADJUST TOPPING THICKNESS BETWEEN THE COLUMN FACE AND THE FLOOR DRAIN TO PROVIDE POSITIVE DRAINAGE. TYPICAL AT ALL FLOOR DRAIN LOCATIONS.

1 SECOND TIER PLAN

3/32" = 1'-0"

IT SHALL BE THE CONTRACTOR'S RESPONSIBILITY TO VERIFY THAT THERE IS A MINIMUM OF 8'-6" HEADROOM BETWEEN ALL DRIVING SURFACES AND OVERHEAD BEAMS PRIOR TO PLACING CONCRETE.

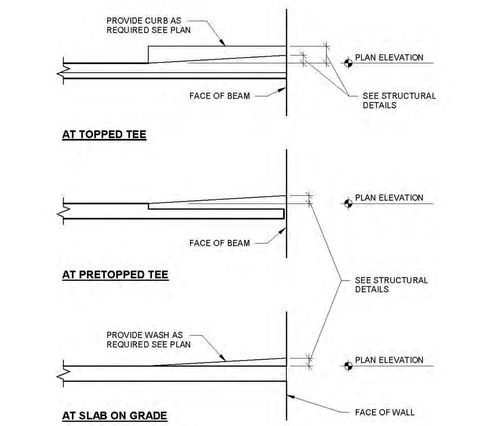

3 PLAN ELEVATION KEY

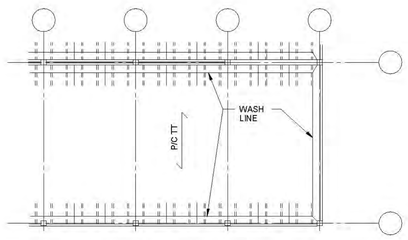

2 TYPICAL BAL PLAN

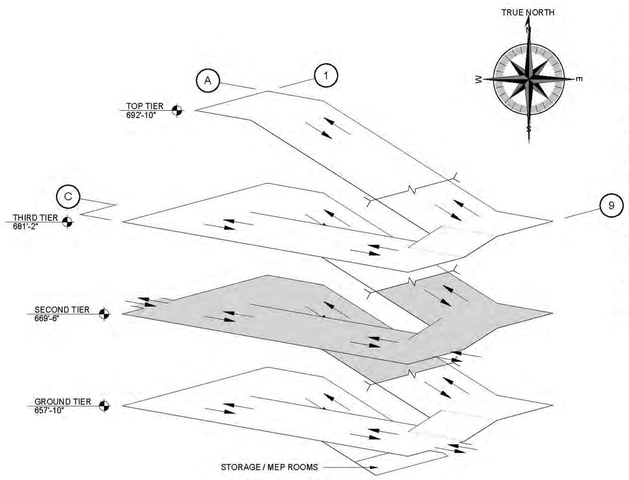

ISOMETRIC

PRELIMINARY - DO NOT USE FOR CONSTRUCTION

PRIME DESIGNER

WALKER CONSULTANTS

2895 Greenspoint Parkway, Suite 600
Hoffman Estates IL 60169
847.697.2640 Ph
www.walkerconsultants.com

ARCHITECTURAL

Studio Level 1

STUDIO LEVEL 1
1001 North Warren Street
Gary, IN 46403
219.951.0214 Ph
www.studiolevel1.com

Mount Prospect

MAPLE STREET
PARKING DECK

MOUNT PROSPECT, IL

MARK	DATE	DESCRIPTION
		REVISIONS

SHEET ISSUE:	95% CONSTRUCTION DOCUMENTS
SHEET ISSUE DATE:	10/16/2019
PROJECT NO:	31-8504.00
DRAWN BY:	JVK
CHECKED BY:	DJM

COPYRIGHT © 2019. ALL RIGHTS RESERVED. NO PART OF THIS DOCUMENT MAY BE REPRODUCED IN ANY FORM OR BY ANY MEANS WITHOUT PERMISSION FROM WALKER CONSULTANTS.

SHEET TITLE:
SECOND TIER PLAN

S-102

10/17/2019 6:34:34 AM C:\Revit Projects\31-8504.00-MAPLE STREET PG-STRUCT_R19_jvkkoppit.rvt

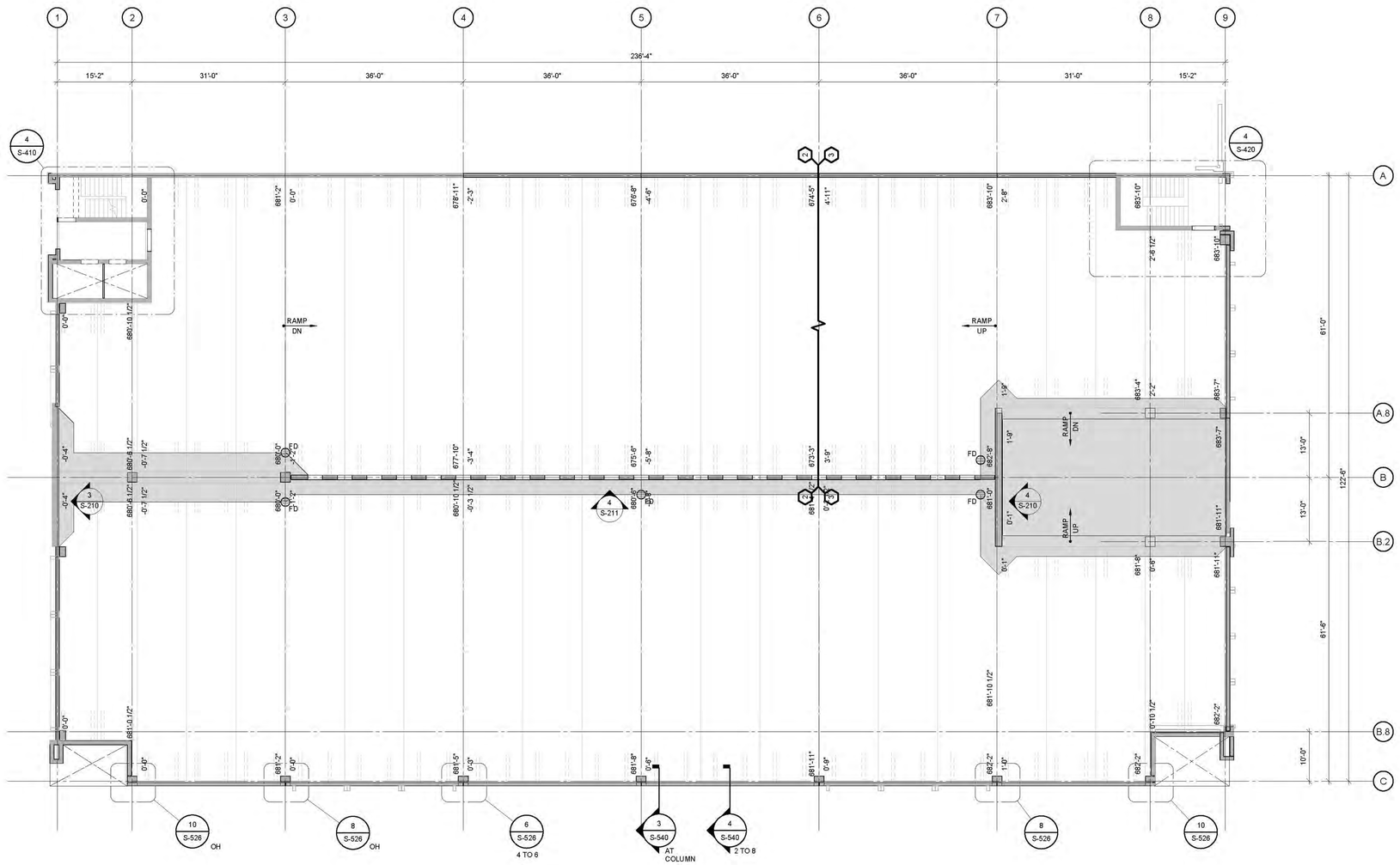

1 THIRD TIER PLAN

3/32" = 1'-0"

IT SHALL BE THE CONTRACTOR'S RESPONSIBILITY TO VERIFY THAT THERE IS A MINIMUM OF 8'-6" HEADROOM BETWEEN ALL DRIVING SURFACES AND OVERHEAD BEAMS PRIOR TO PLACING CONCRETE.

SHEET NOTES

1. REFER TO SHEET S-001 FOR GENERAL NOTES.
2. LEVEL 02 IS INTENDED TO REPRESENT THE TYPICAL LEVEL PLAN. DETAIL REFERENCES AND OTHER INFORMATION SHOWN ON SHEET S-102 APPLY TO ALL SUPPORTED TIERS UNLESS OTHERWISE NOTED.
3. SEE 2/S-101 FOR TYPICAL BAY PLAN.
4. SEE 3/S-101 FOR PLAN ELEVATION KEY.
5. REFER TO SHEET S-525 AND S-526 FOR PRECAST COLUMN DETAILS.
6. REFER TO SHEET S-520 FOR PRECAST BEAM DETAILS.
7. REFER TO SHEET S-521 FOR PRECAST DOUBLE TEE DETAILS.
8. REFER TO SHEET S-210 FOR PRECAST SHEAR WALL DETAILS AND SHEET S-211 FOR PRECAST LIGHT WALL DETAILS.
9. REFER TO S-410 SERIES DRAWINGS FOR STAIR PLANS, ELEVATIONS AND SECTIONS.
10. SEE SHEET S-540 FOR STRUCTURAL DETAILS.
11. COORDINATE FLOOR DRAINS WITH PLUMBING DRAWINGS AND DETAIL 11/S-521.
12. COORDINATE WITH OTHER TRADES FOR BLOCKOUTS AND PENETRATIONS.
13. ALL COLUMNS ARE CENTERED ON GRID LINES, UNLESS NOTED.
14. USE STRAIGHT LINE INTERPOLATION FOR FLOOR ELEVATION BETWEEN THOSE INDICATED.
15. [▨] INDICATES HEAVY DUTY TRAFFIC TOPPING MEMBRANE. EXTEND 1'-0" BEYOND LIMITS OF ROOM BELOW, UNLESS NOTED OTHERWISE.
16. ADJUST TOPPING THICKNESS BETWEEN THE COLUMN FACE AND THE FLOOR DRAIN TO PROVIDE POSITIVE DRAINAGE. TYPICAL AT ALL FLOOR DRAIN LOCATIONS.

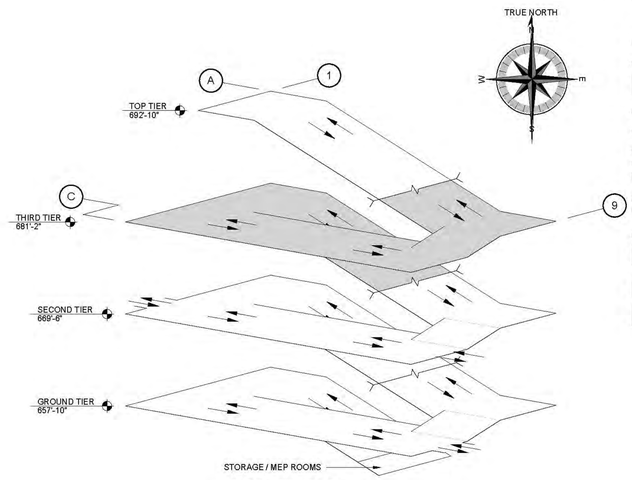

ISOMETRIC

PRELIMINARY - DO NOT USE FOR CONSTRUCTION

PRIME DESIGNER

WALKER CONSULTANTS

2895 Greenspoint Parkway, Suite 600
Hoffman Estates IL 60169
847.697.2640 Ph
www.walkerconsultants.com

ARCHITECTURAL

Studio Level 1

STUDIO LEVEL 1
1001 North Warren Street
Gary, IN 46403
219.951.0214 Ph
www.studiolevel1.com

Mount Prospect

MAPLE STREET
PARKING DECK

MOUNT PROSPECT, IL

MARK	DATE	DESCRIPTION
		REVISIONS
SHEET ISSUE:		95% CONSTRUCTION DOCUMENTS
SHEET ISSUE DATE:		10/16/2019
PROJECT NO:		31-8504.00
DRAWN BY:		JVK
CHECKED BY:		DJM

COPYRIGHT © 2019. ALL RIGHTS RESERVED. NO PART OF THIS DOCUMENT MAY BE REPRODUCED IN ANY FORM OR BY ANY MEANS WITHOUT PERMISSION FROM WALKER CONSULTANTS.

SHEET TITLE:
THIRD TIER PLAN

S-103

10/17/2019 8:34:41 AM C:\Revit Projects\31-8504.00-MAPLE STREET PG-STRUCT_R19_jvkeppel.rvt

SHEET NOTES

1. SEE SHEET S-102 FOR TYPICAL SHEET NOTES AND LOCATIONS OF TYPICAL DETAIL REFERENCES (UNLESS NOTED).
2. PRECASTER TO UTILIZE CONCRETE MIX DESIGN THAT RESULTS IN THE TOP TIER DOUBLE TEE SURFACE HAVING A SOLAR REFLECTANCE INDEX (SRI) OF 29 OR HIGHER.
3. ADJUST TOPPING THICKNESS BETWEEN THE COLUMN FACE AND THE FLOOR DRAIN TO PROVIDE POSITIVE DRAINAGE. TYPICAL AT ALL FLOOR DRAIN LOCATIONS.

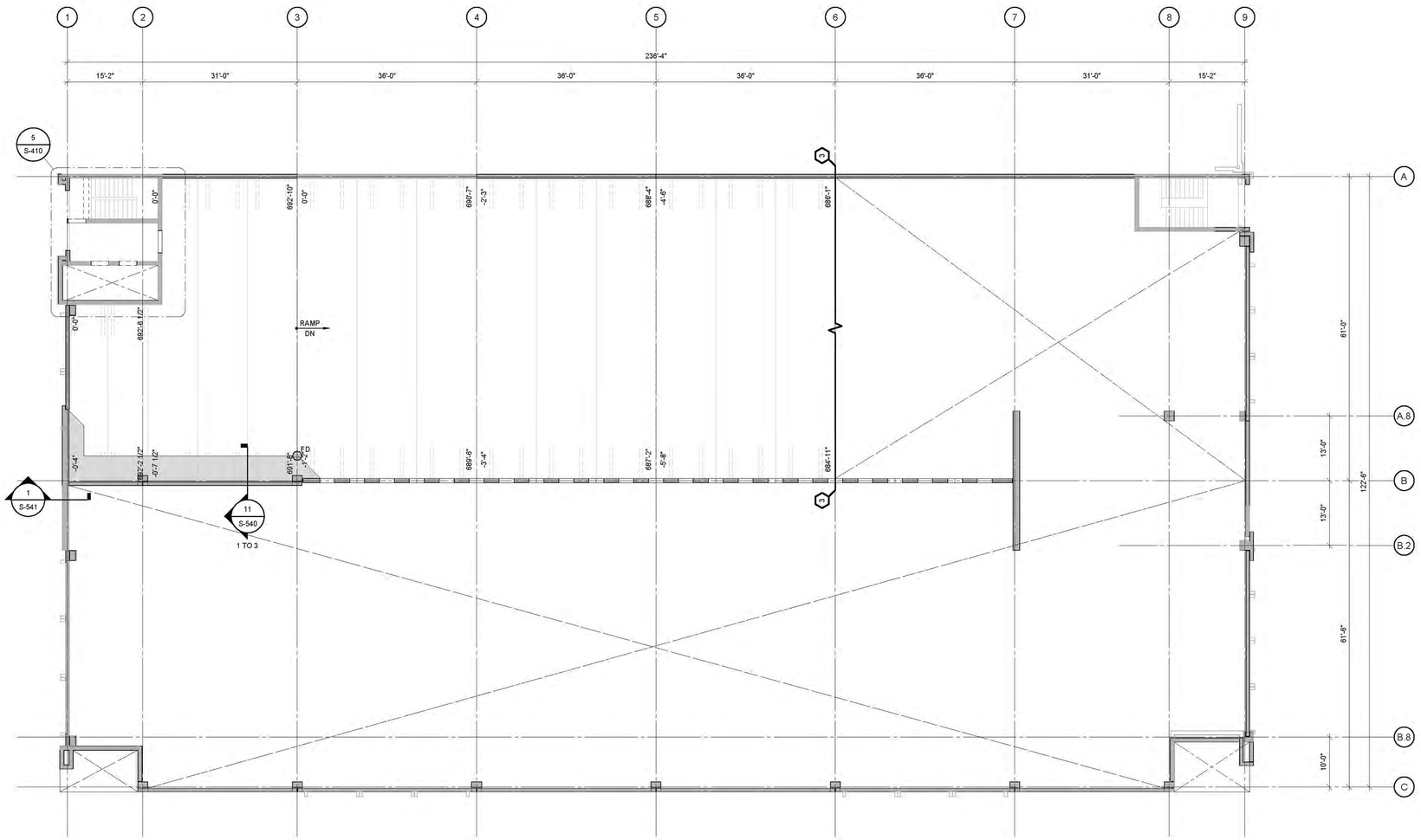

1 TOP TIER PLAN
3/32" = 1'-0"

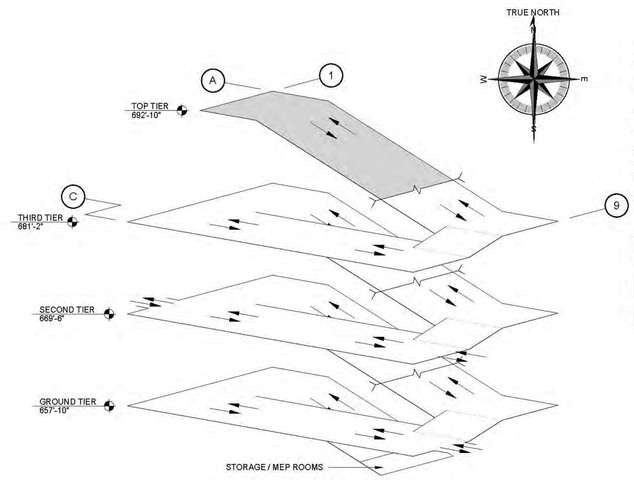

ISOMETRIC

PRELIMINARY - DO NOT USE FOR CONSTRUCTION

PRIME DESIGNER

WALKER CONSULTANTS

2895 Greenspoint Parkway, Suite 600
Hoffman Estates IL 60169
847.697.2640 Ph
www.walkerconsultants.com

ARCHITECTURAL

Studio Level 1

STUDIO LEVEL 1
1001 North Warren Street
Gary, IN 46403
219.951.0214 Ph
www.studiolevel1.com

Mount Prospect

MAPLE STREET
PARKING DECK

MOUNT PROSPECT, IL

MARK	DATE	DESCRIPTION
		REVISIONS
SHEET ISSUE:		95% CONSTRUCTION DOCUMENTS
SHEET ISSUE DATE:		10/16/2019
PROJECT NO:		31-8504.00
DRAWN BY:		JVK
CHECKED BY:		DJM

COPYRIGHT © 2019. ALL RIGHTS RESERVED. NO PART OF THIS DOCUMENT MAY BE REPRODUCED IN ANY FORM OR BY ANY MEANS WITHOUT PERMISSION FROM WALKER CONSULTANTS.

SHEET TITLE:
TOP TIER PLAN

S-104

10/17/2019 6:34:47 AM C:\Revit Projects\31-8504.00-MAPLE STREET PG-STRUCT_R19_jvkkappel.rvt

PC SHEARWALL LATERAL LOAD SCHEDULE			
MEMBER	*TYPE*		*FORCE (K)*
EAST SHEAR WALL	SEISMIC	THIRD TIER	103
		SECOND TIER	60
		BASE SHEAR	163
	WIND	THIRD TIER	32
		SECOND TIER	40
		BASE SHEAR	72
WEST SHEAR WALL	SEISMIC	TOP TIER	77
		THIRD TIER	63
		SECOND TIER	38
		BASE SHEAR	176
	WIND	TOP TIER	88
		THIRD TIER	22
		SECOND TIER	27
		BASE SHEAR	137

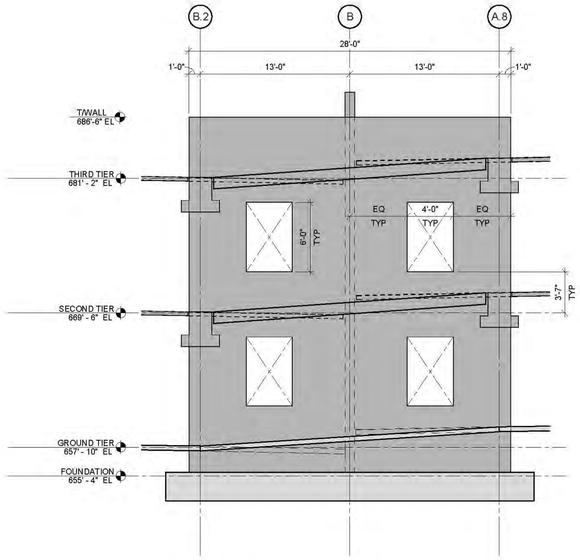

4 EAST SHEAR WALL ELEVATION - LOOKING WEST
3/16" = 1'-0"

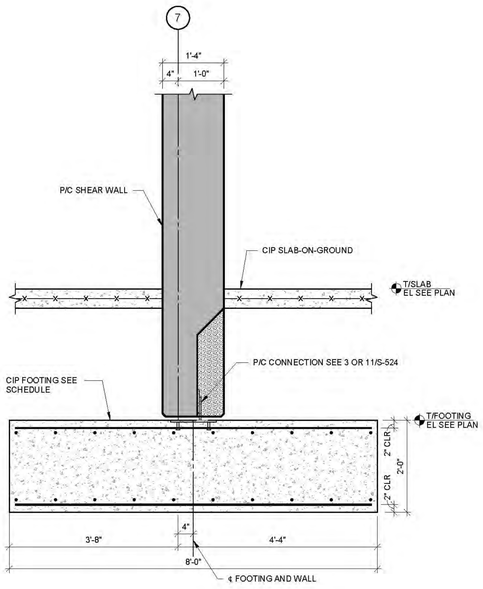

5 SHEAR WALL FOUNDATION DETAIL

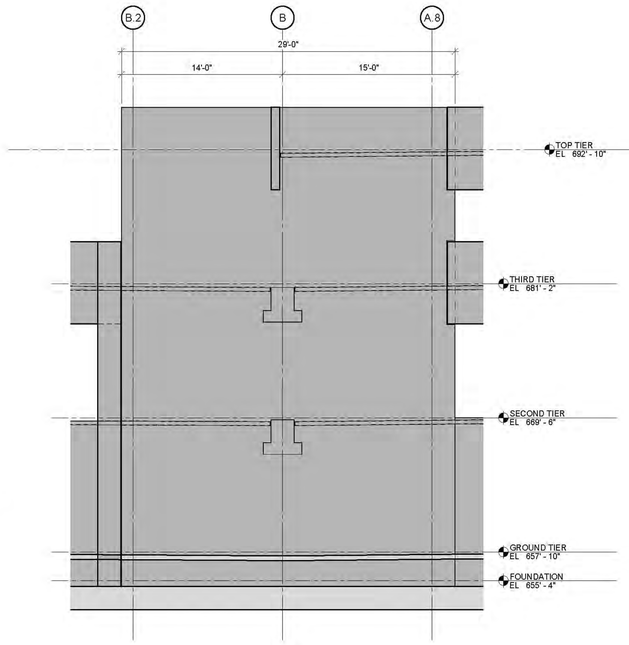

3 WEST SHEAR WALL ELEVATION - LOOKING WEST
3/16" = 1'-0"

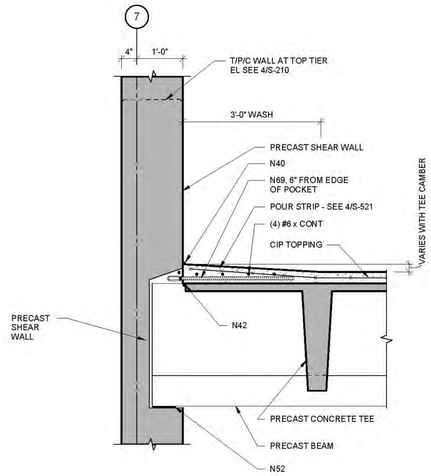

2 TEE/SHEAR WALL/BEAM DETAIL

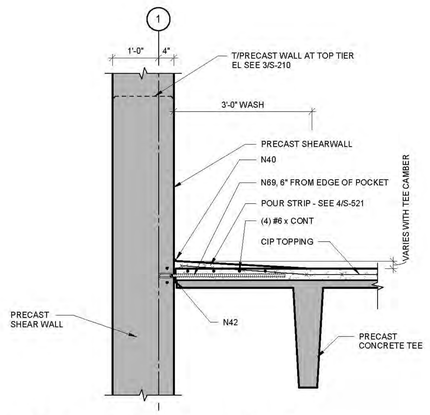

1 TEE/SHEAR WALL DETAIL

SHEET NOTES

1. FOR GENERAL NOTES SEE S-001
2. SHEARWALL DESIGN IS PERFORMANCE DESIGN AND SHALL INCLUDE SIZE, NUMBER AND LOCATION OF VERTICAL AND HORIZONTAL REINFORCING. DESIGN SHALL ALSO INCLUDE BASE CONNECTIONS, PIECE CONNECTIONS, HAUNCH OR LEDGE REINFORCEMENT, AND SIZE, NUMBER, AND SPACING OF INSERT/COIL ROD (OR OTHER SHEAR TRANSFER) CONNECTIONS INTO POUR STRIPS FOR SHEAR TRANSFER OF LATERAL LOADS. SEE SPECIFICATION 03410 FOR PRECAST CONCRETE.
3. FOR SHEARWALL SIZES, SEE SHEARWALL ELEVATIONS THIS SHEET AND STRUCTURAL DETAILS.
4. FOR SHEARWALL BASE CONNECTION SEE 11/S-524.
5. FOR LATERAL LOADS DUE TO SEISMIC SEE SCHEDULE. LOADS INDICATED REPRESENT BASE SHEAR "V" AND VERTICAL DISTRIBUTION OF SEISMIC FORCES "F" PER IBC AND APPLY TO EACH SHEARWALL (LOADS ARE REVERSIBLE).
6. SHEARWALL PANELS AND COLUMN SECTIONS SHALL BE CONNECTED TO ACT AS ONE INTEGRAL UNIT.

SHEET KEYNOTES

N40. COVE SEALANT. SEE DETAIL 4/S-522.
N42. CONTINUOUS ETHAFOAM CONC DAM AS REQ'D.
N51. RANDOM ORIENTED FIBER REINFORCED BRG. PAD X 3/8", GLUE TO TEE STEM.
N52. SORBTEX BRG PAD X 1/2", GLUE TO BEAM, AT EACH END OF BEAM. PROVIDE HOLE IN PAD FOR BOLT AT REQUIRED LOCATIONS.
N69. 3/4" DIA INSERT AND COIL ROD X 2'-6" (6" FROM EDGE OF EACH POCKET) W/ #4 HAIRPIN W/ 2'-0" LEGS AROUND INSERT AND 1-#4 CONTINUOUS.

PRIME DESIGNER

WALKER CONSULTANTS

2885 Greenspoint Parkway, Suite 600
Hoffman Estates IL 60169
847.697.2640 Ph
www.walkerconsultants.com

ARCHITECTURAL

Studio Level 1

STUDIO LEVEL 1
1001 North Warren Street
Gary, IN 46403
219.951.0214 Ph
www.studiolevel1.com

PRELIMINARY - DO NOT USE FOR CONSTRUCTION

Mount Prospect

MAPLE STREET
PARKING DECK

MOUNT PROSPECT, IL

MARK	DATE	DESCRIPTION
REVISIONS		
SHEET ISSUE:		95% CONSTRUCTION DOCUMENTS
SHEET ISSUE DATE:		10/16/2019
PROJECT NO:		31-8504.00
DRAWN BY:		JVK
CHECKED BY:		DJM

COPYRIGHT © 2019. ALL RIGHTS RESERVED. NO PART OF THIS DOCUMENT MAY BE REPRODUCED IN ANY FORM OR BY ANY MEANS WITHOUT PERMISSION FROM WALKER CONSULTANTS.

SHEET TITLE:
PRECAST SHEAR WALL DETAILS

S-210

10/17/2019 8:34:52 AM C:\Revit Projects\31-8504.00-MAPLE STREET PO-STRUCT_R19_jvkkappel.rvt

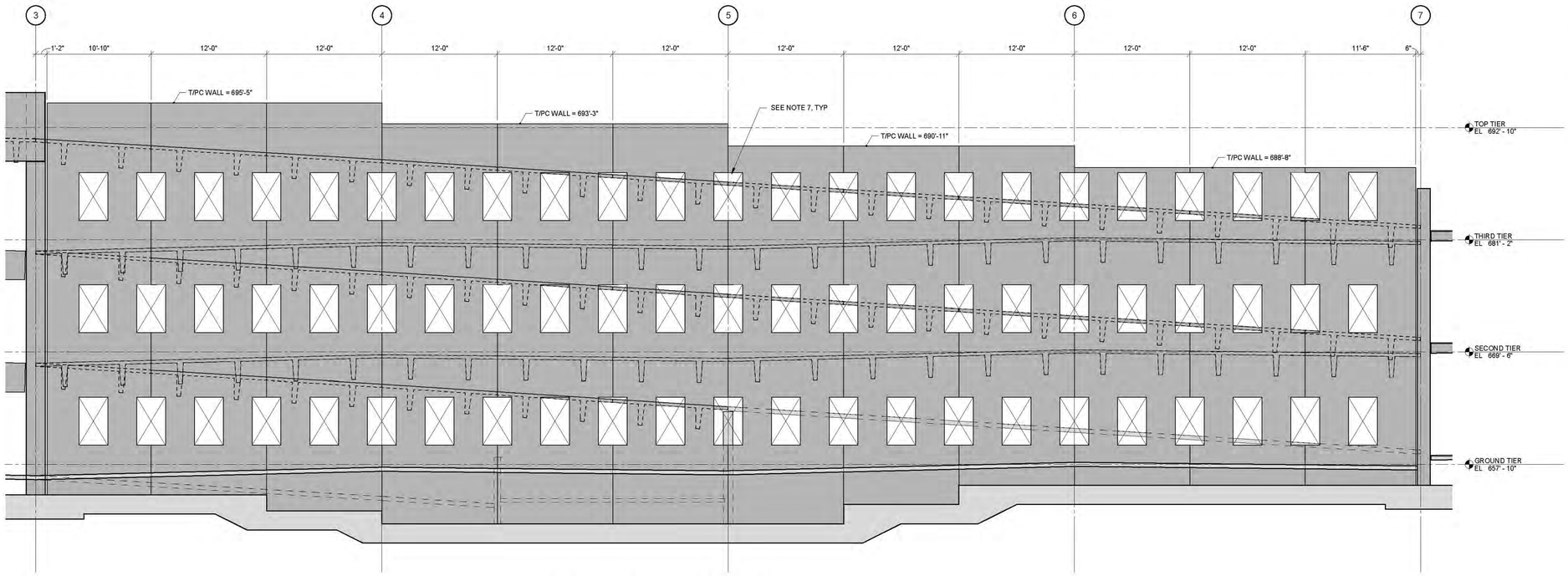

4 LIGHT WALL ELEVATION
3/16" = 1'-0"

SHEET NOTES

1. FOR GENERAL NOTES SEE S-001.
2. LIGHTWALL DESIGN IS PERFORMANCE DESIGN AND SHALL INCLUDE SIZE, NUMBER AND LOCATION OF VERTICAL AND HORIZONTAL REINFORCING, INCLUDING TIES AND STIRRUPS. DESIGN SALL ALSO INCLUDE BASE CONNECTIONS, HAUNCH OR LEDGE REINFORCEMENT, AND SIZE, NUMBER, AND SPACING OF INSERT/COIL ROD (OR OTHER SHEAR TRANSFER) CONNECTIONS INTO POUR STRIPS FOR SHEAR TRANSFER OF LATERAL LOADS. SEE SPECIFICATION 03410 FOR PRECAST CONCRETE.
3. FOR LIGHTWALL SIZES SEE DETAILS THIS SHEET.
4. FOR LIGHTWALL BASE CONNECTION SEE 1105-524.
5. PROVIDE THICKENED SECTION AT TOP OF LIGHTWALL AS REQUIRED FOR LIGHT POLE SUPPORT. COORDINATE LOCATION AND REQUIREMENTS WITH ELECTRICAL DRAWINGS AND LIGHT POLE SUPPLIER, SEE 3/S-211.
6. FOR LATERAL LOADS DUE TO SEISMIC SEE SCHEDULE. LOADS INDICATED REPRESENT BASE "V" AND VERTICAL DISTRIBUTION OF SEISMIC FORCES "F" PER IBC AND APPLY TO EACH LIGHTWALL (LOADS ARE REVERSIBLE).
7. ALL LIGHTWALL OPENING FENCE SHALL BE PRECASTER'S STANDARD FALL PROTECTION SYSTEM AND SHALL BE GALVANIZED.

SHEET NOTES

N51. RANDOM ORIENTED FIBER REINFORCED BRG. PAD X 3/8", GLUE TO TEE STEM.

PC LIGHTWALL LATERAL LOAD SCHEDULE

MEMBER	TYPE		FORCE (K)
LIGHT WALL	SEISMIC	TOP TIER	76
		THIRD TIER	165
		SECOND TIER	96
		BASE SHEAR	337
	WIND	TOP TIER	42
		THIRD TIER	23
		SECOND TIER	30
		BASE SHEAR	95

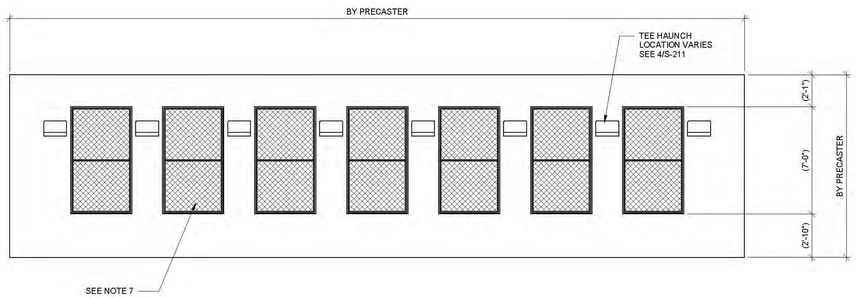

3 LIGHT WALL ELEVATION DETAIL

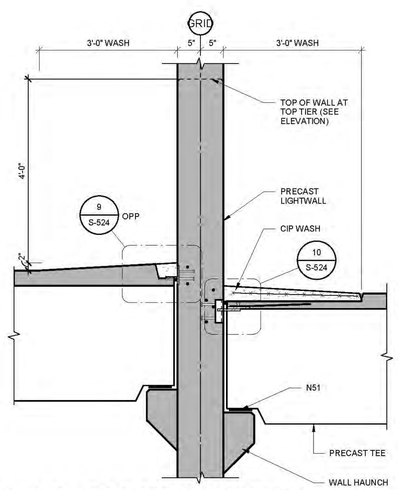

2 PRECAST TEE / LIGHTWALL DETAIL

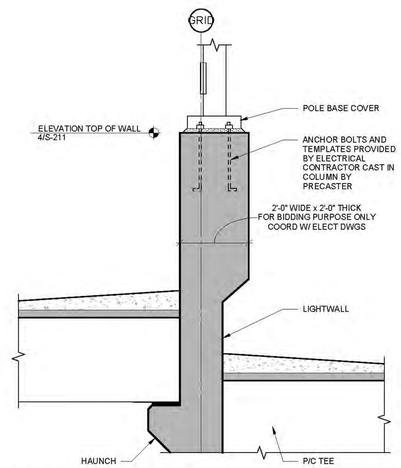

1 LIGHTWALL/POLE BASE CONNECTION DETAIL

PRELIMINARY - DO NOT USE FOR CONSTRUCTION

PRIME DESIGNER

WALKER CONSULTANTS
2895 Greenspoint Parkway, Suite 600
Hoffman Estates IL 60169
847.697.2640 Ph
www.walkerconsultants.com

ARCHITECTURAL

Studio Level 1
STUDIO LEVEL 1
1001 North Warren Street
Gary, IN 46403
219.951.0214 Ph
www.studiolevel1.com

Mount Prospect

MAPLE STREET
PARKING DECK

MOUNT PROSPECT, IL

MARK	DATE	DESCRIPTION
		REVISIONS

SHEET ISSUE:	95% CONSTRUCTION DOCUMENTS
SHEET ISSUE DATE:	10/18/2019
PROJECT NO:	31-8504.00
DRAWN BY:	JVK
CHECKED BY:	DJM

COPYRIGHT © 2019. ALL RIGHTS RESERVED. NO PART OF THIS DOCUMENT MAY BE REPRODUCED IN ANY FORM OR BY ANY MEANS WITHOUT PERMISSION FROM WALKER CONSULTANTS.

SHEET TITLE:
PRECAST LIGHT WALL DETAILS

S-211

10/17/2019 8:34:58 AM C:\Revit Projects\31-8504.00-MAPLE STREET PO-STRUCT_R19_jwkappel.rvt

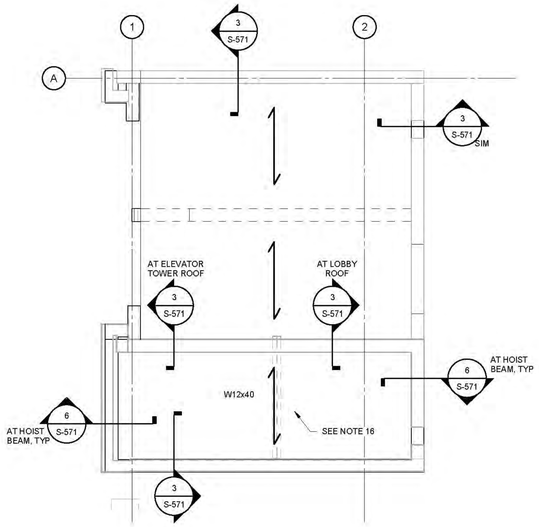

6 STAIR ROOF PLAN
1/4" = 1'-0"

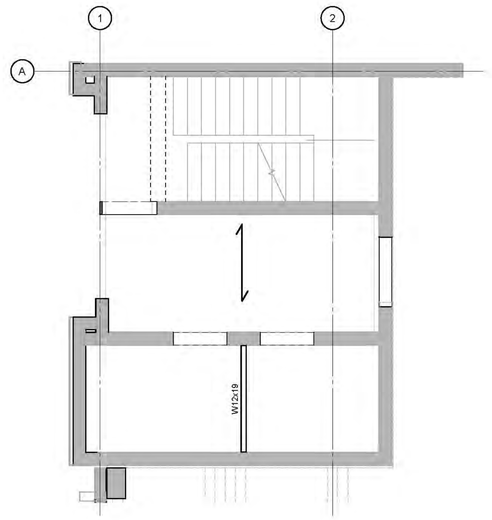

4 THIRD TIER PLAN
1/4" = 1'-0"

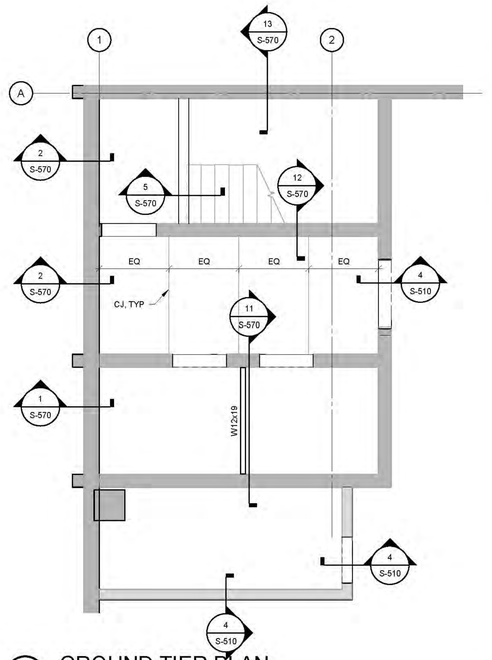

2 GROUND TIER PLAN
1/4" = 1'-0"

SHEET NOTES

1. THE SECOND TIER IS INTENDED TO REPRESENT THE TYPICAL LEVEL PLAN. SHEET NOTES, DETAIL REFERENCES, AND OTHER INFORMATION SHOWN APPLY TO ALL SUPPORTED TIER PLANS UNLESS NOTED OTHERWISE.
2. SEE SHEET S-001 FOR GENERAL NOTES.
3. SEE SHEET S-501 FOR TYPICAL DETAILS.
4. SEE ARCHITECTURAL DRAWINGS FOR DIMENSIONS AND OTHER INFORMATION NOT SHOWN.
5. PROVIDE EMBED PLATES AT TOP OF CIP WALLS/FOOTINGS FOR PRECAST WALL CONNECTIONS.
6. SEE SHEET NOTES 11 AND 12 ON SHEET S-101 FOR SLAB ON GROUND INFORMATION.
7. SEE S-570 SERIES SHEETS FOR TYPICAL STAIR DETAILS.
8. SEE SHEET S-520 FOR PRECAST BEAM DETAILS.
9. SEE SHEET S-521 FOR PRECAST DOUBLE TEE DETAILS.
10. SEE SHEET S-540 FOR STRUCTURAL DETAILS.
11. COORDINATE WITH OTHER TRADES FOR BLOCKOUTS AND PENETRATIONS.
12. SEE ARCHITECTURAL DRAWINGS FOR ROOFING MATERIALS AND DETAILS.
13. SEISMIC LOADS TO STAIR TOWER ARE AS FOLLOWS:
    - ROOF : 9 KIPS
    - TOP TIER : 11.5 KIPS
    - THIRD TIER : 7 KIPS
    - SECOND TIER : 3.5 KIPS
14. SEE DETAIL 3/S-570 FOR ELEVATOR SUMP PIT DETAIL. COORDINATE SIZE AND LOCATION WITH ELEVATOR MANUFACTURER.
15. ELEVATOR DIVIDER BEAM. COORDINATE LOCATIONS WITH ELEVATOR MANUFACTURER. SEE DETAIL X/S-XXX FOR CONNECTION TO WALL.
16. ELEVATOR HOIST BEAM. COORDINATE WITH ELEVATOR MANUFACTURER. SEE DETAIL X/S-XXX FOR CONNECTION TO WALL.

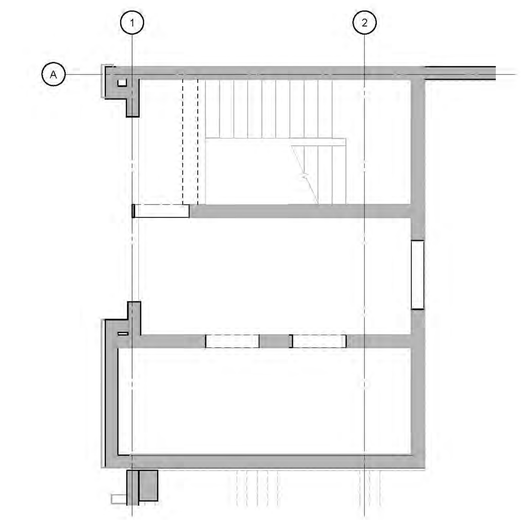

5 TOP TIER PLAN
1/4" = 1'-0"

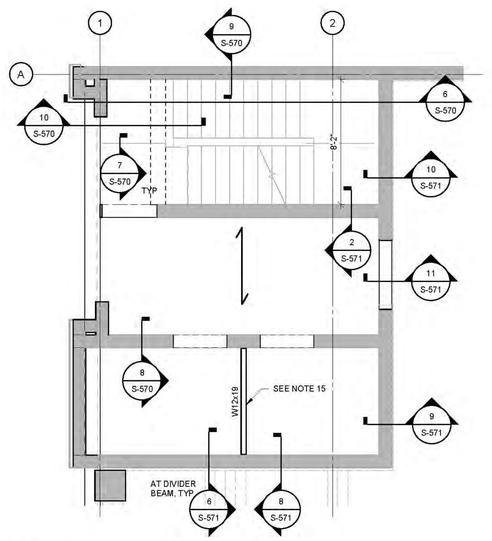

3 SECOND TIER PLAN
1/4" = 1'-0"

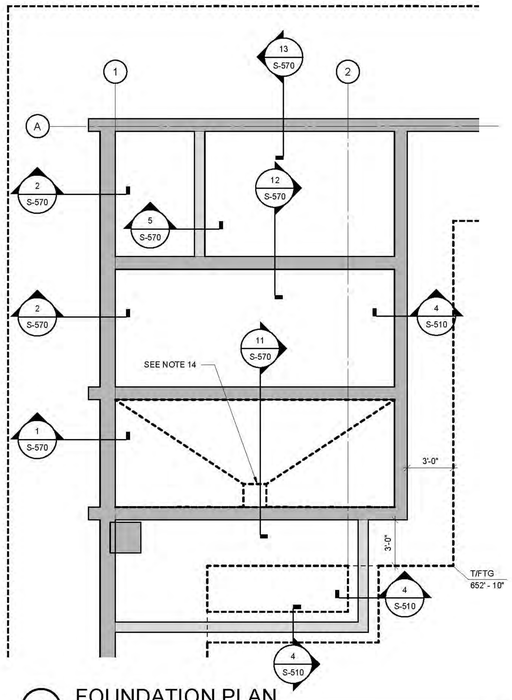

1 FOUNDATION PLAN
1/4" = 1'-0"

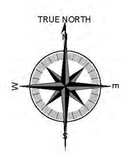

PRELIMINARY - DO NOT USE FOR CONSTRUCTION

PRIME DESIGNER

WALKER CONSULTANTS

2895 Greenspoint Parkway, Suite 600
Hoffman Estates IL 60169
847.697.2640 Ph
www.walkerconsultants.com

ARCHITECTURAL

Studio Level 1

STUDIO LEVEL 1
1001 North Warren Street
Gary, IN 46403
219.951.0214 Ph
www.studiolevel1.com

Mount Prospect

MAPLE STREET
PARKING DECK

MOUNT PROSPECT, IL

MARK	DATE	DESCRIPTION
REVISIONS		

SHEET ISSUE:	95% CONSTRUCTION DOCUMENTS
SHEET ISSUE DATE:	10/16/2019
PROJECT NO:	31-8504.00
DRAWN BY:	JVK
CHECKED BY:	DJH

COPYRIGHT © 2019. ALL RIGHTS RESERVED. NO PART OF THIS DOCUMENT MAY BE REPRODUCED IN ANY FORM OR BY ANY MEANS WITHOUT PERMISSION FROM WALKER CONSULTANTS.

SHEET TITLE:
STAIR TOWER NO. 1 ENLARGED PLANS

S-410

10/17/2019 6:35:03 AM C:\Revit Projects\31-8504.00-MAPLE STREET PG-STRUCT_R19_jvkoppel.rvt

SHEET NOTES

1. THE SECOND TIER IS INTENDED TO REPRESENT THE TYPICAL LEVEL PLAN. SHEET NOTES, DETAIL REFERENCES, AND OTHER INFORMATION SHOWN APPLY TO ALL SUPPORTED TIER PLANS UNLESS NOTED OTHERWISE.
2. SEE SHEET S-001 FOR GENERAL NOTES.
3. SEE SHEET S-501 FOR TYPICAL DETAILS.
4. SEE ARCHITECTURAL DRAWINGS FOR DIMENSIONS AND OTHER INFORMATION NOT SHOWN.
5. PROVIDE EMBED PLATES AT TOP OF CIP WALLS/FOOTINGS FOR PRECAST WALL CONNECTIONS.
6. SEE SHEET NOTES 11 AND 12 ON SHEET S-101 FOR SLAB ON GROUND INFORMATION.
7. SEE S-570 SERIES SHEETS FOR TYPICAL STAIR DETAILS.
8. SEE SHEET S-520 FOR PRECAST BEAM DETAILS.
9. SEE SHEET S-521 FOR PRECAST DOUBLE TEE DETAILS.
10. SEE SHEET S-540 FOR STRUCTURAL DETAILS.
11. COORDINATE WITH OTHER TRADES FOR BLOCKOUTS AND PENETRATIONS.
12. SEE ARCHITECTURAL DRAWINGS FOR ROOFING MATERIALS AND DETAILS.
13. SEISMIC LOADS TO STAIR TOWER ARE AS FOLLOWS:
    - ROOF : 9 KIPS
    - TOP TIER : 11.5 KIPS
    - THIRD TIER : 7 KIPS
    - SECOND TIER : 3.5 KIPS

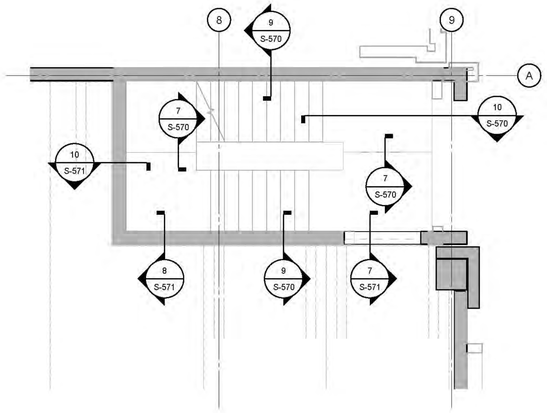

3 SECOND TIER - TOWER 2
1/4" = 1'-0"

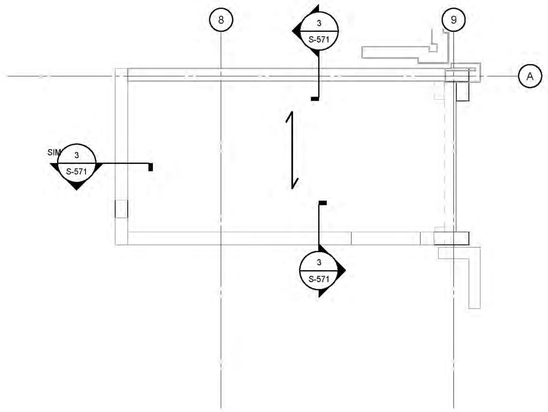

5 STAIR ROOF - TOWER 2
1/4" = 1'-0"

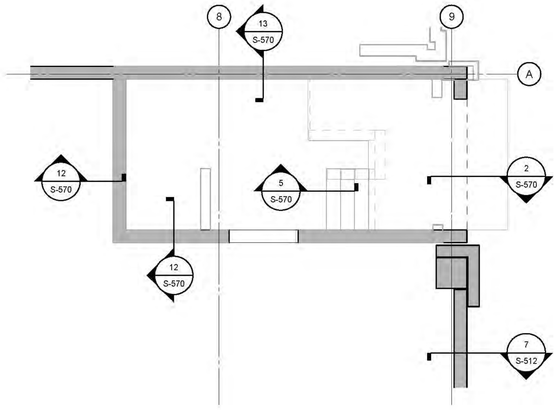

2 GROUND TIER - TOWER 2
1/4" = 1'-0"

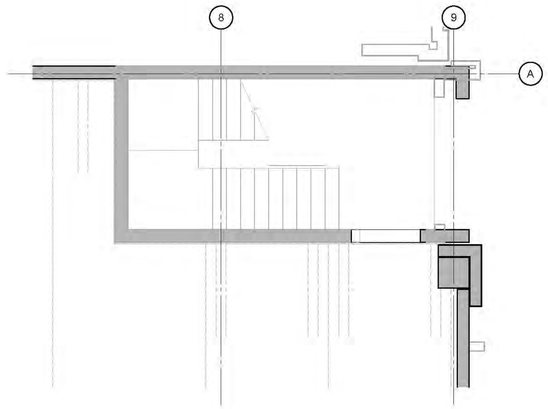

4 TOP TIER - TOWER 2
1/4" = 1'-0"

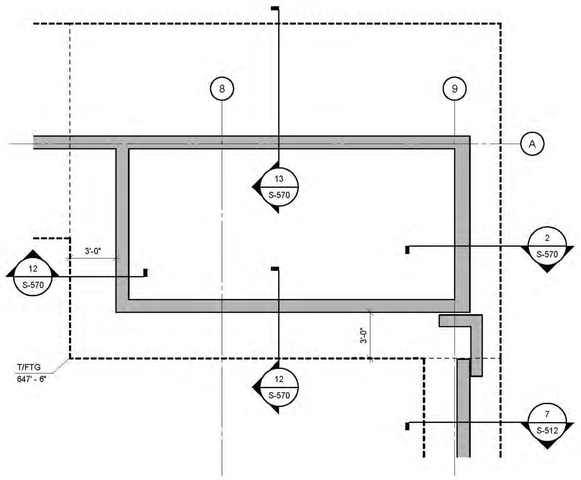

1 FOUNDATION - TOWER 2
1/4" = 1'-0"

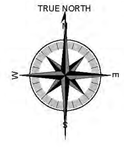

PRELIMINARY - DO NOT USE FOR CONSTRUCTION

PRIME DESIGNER

WALKER CONSULTANTS
2895 Greenspoint Parkway, Suite 600
Hoffman Estates IL 60169
847.697.2640 Ph
www.walkerconsultants.com

ARCHITECTURAL

Studio Level 1
STUDIO LEVEL 1
1001 North Warren Street
Gary, IN 46403
219.951.0214 Ph
www.studiolevel1.com

Mount Prospect

MAPLE STREET
PARKING DECK

MOUNT PROSPECT, IL

MARK	DATE	DESCRIPTION
		REVISIONS

SHEET ISSUE:	95% CONSTRUCTION DOCUMENTS
SHEET ISSUE DATE:	10/16/2019
PROJECT NO:	31-8504.00
DRAWN BY:	JWK
CHECKED BY:	DJM

COPYRIGHT © 2019. ALL RIGHTS RESERVED. NO PART OF THIS DOCUMENT MAY BE REPRODUCED IN ANY FORM OR BY ANY MEANS WITHOUT PERMISSION FROM WALKER CONSULTANTS.

SHEET TITLE:
STAIR TOWER NO. 2 ENLARGED PLANS

S-420

10/17/2019 6:35:07 AM C:\Revit Projects\31-8504.00-MAPLE STREET PS-STRUCT_R19_jwkeppel.rvt

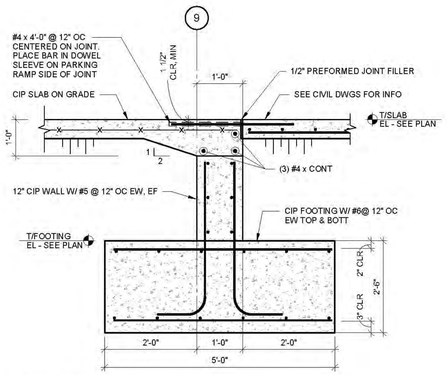

21 EDGE OF SLAB DETAIL

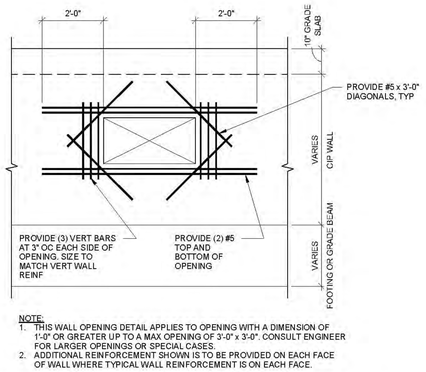

NOTE:
1. THIS WALL OPENING DETAIL APPLIES TO OPENING WITH A DIMENSION OF 1'-0" OR GREATER UP TO A MAX OPENING OF 3'-0" x 3'-0". CONSULT ENGINEER FOR LARGER OPENINGS OR SPECIAL CASES.
2. ADDITIONAL REINFORCEMENT SHOWN IS TO BE PROVIDED ON EACH FACE OF WALL WHERE TYPICAL WALL REINFORCEMENT IS ON EACH FACE.

20 WALL CORNER REINFORCEMENT

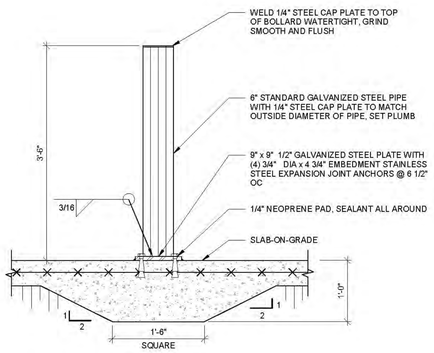

NOTES:
1. PAINT ENTIRE PIPE GUARD ASSEMBLY TRAFFIC YELLOW.
2. INSTALL BOLLARD USING THIS BASE PLATE AND EXPANSION BOLTS AT PRECAST BEAM LOCATION AT SIMILAR.

19 PIPE BOLLARD DETAIL

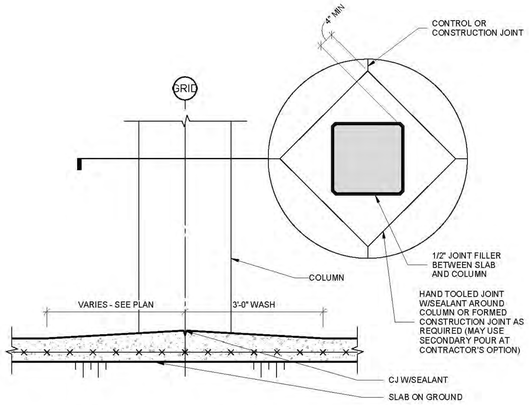

18 GRADE SLAB/COLUMN DETAIL

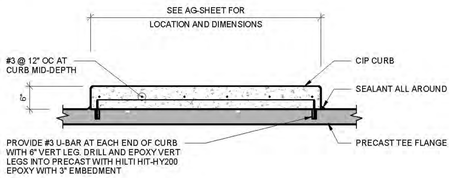

17 CURB DETAIL

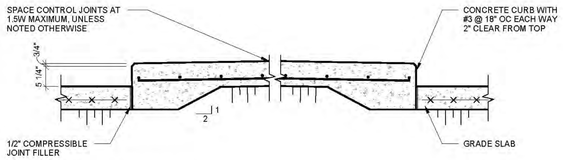

16 CURB DETAIL

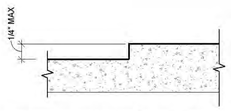

REFERENCED REGULATIONS AND STANDARDS

1. CHANGES IN LEVEL LESS THAN 1/4".
2. ADA-ACCESSIBILITY GUIDELINES FIGURE 303.2 CHANGE IN LEVEL FIG. 1
3. ASTM F1637-02 STANDARD PRACTICE FOR SAFE WALKING SURFACES IN SECTION 5.2.2.
4. REFER TO SPECIFICATIONS FOR ADDITIONAL REQUIREMENTS.

15 VERTICAL CHANGE IN LEVEL

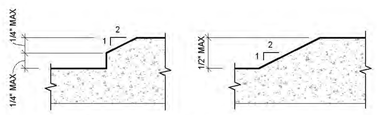

REFERENCED REGULATIONS AND STANDARDS

1. CHANGES IN LEVEL BETWEEN 1/4" AND 1/2".
2. ADA-ACCESSIBILITY GUIDELINES FIGURE 303.2 BEVELED CHANGE IN LEVEL
3. ASTM F1637-02 STANDARD PRACTICE FOR SAFE WALKING SURFACES IN SECTION 5.2.3.
4. REFER TO SPECIFICATIONS FOR ADDITIONAL REQUIREMENTS.

14 VERTICAL CHANGE IN LEVEL

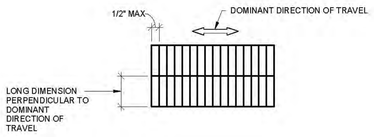

REFERENCED REGULATIONS AND STANDARDS

1. OPENINGS IN FLOOR OR GROUND SURFACES SHALL NOT ALLOW PASSAGE OF A SPHERE OF MORE THAN 1/2" DIA EXCEPT AS ALLOWED FOR ELEVATORS ADA 409.4.3. AND ADA 407.4.3. AND PLATFORM LIFTS ADA 410.4.
2. ADA-ACCESSIBILITY GUIDELINES FIGURE 303.2 ELONGATED OPENINGS IN FLOOR OR GROUND SURFACES.
3. ASTM F1637-02 STANDARD PRACTICE FOR SAFE WALKING SURFACES IN SECTION 10.
4. REFER TO SPECIFICATIONS FOR ADDITIONAL REQUIREMENTS.

13 OPENINGS IN FLOOR SURFACES

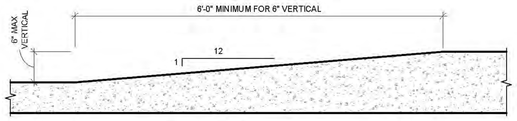

REFERENCED REGULATIONS AND STANDARDS

1. CHANGES IN LEVEL LESS THAN 1/2" AND 6".
   A. REFER TO REFERENCED STANDARDS FOR ADDITIONAL REQUIREMENTS.
   B. MAX SLOPE ON RAMP SURFACE IS 8.33%.
2. ADA-ACCESSIBILITY GUIDELINES RAMP SECTION 405 AND CURB RAMPS SECTION 406.
3. ASTM F1637-02 STANDARD PRACTICE FOR SAFE WALKING SURFACES. CHANGES IN LEVEL GREATER THAN 1/2" IN SECTION 5.2.4.
4. REFER TO SPECIFICATIONS FOR ADDITIONAL REQUIREMENTS.

12 VERTICAL CHANGE IN LEVEL

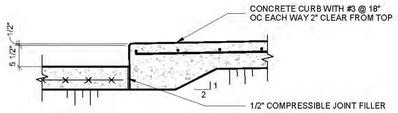

11 CURB DETAIL

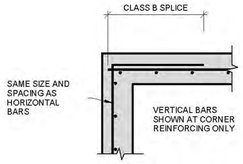

10 CORNER REINFORCEMENT

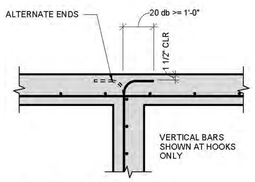

db = DIAMETER OF BAR

9 CORNER REINFORCEMENT

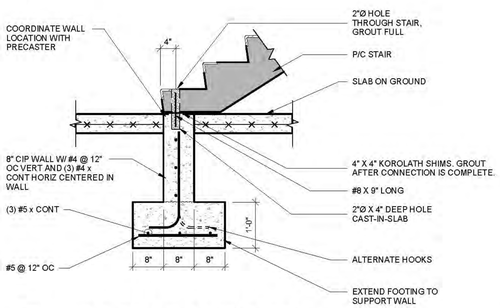

8 PCC STAIR/SLAB DETAIL

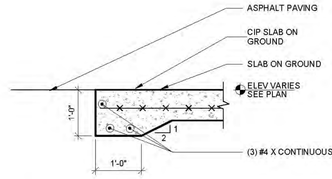

7 EDGE OF SLAB DETAIL

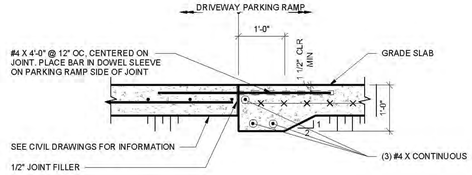

6 EDGE OF SLAB DETAIL

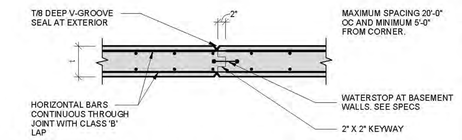

5 WALL CONSTRUCTION JOINT

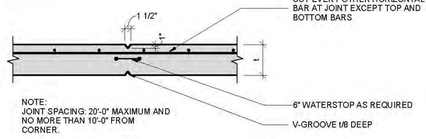

4 VERTICAL WALL CONTROL JOINT

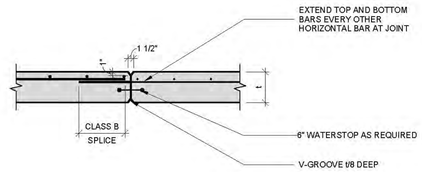

3 VERTICAL WALL CONSTRUCTION JOINT

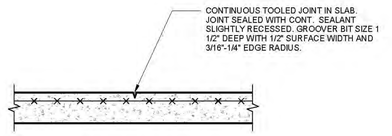

2 SLAB CONTROL JOINT

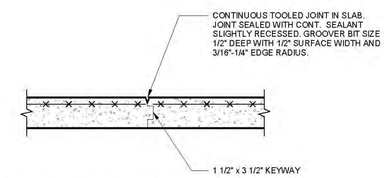

1 SLAB CONSTRUCTION JOINT

PRELIMINARY - DO NOT USE FOR CONSTRUCTION

PRIME DESIGNER

WALKER CONSULTANTS

2885 Greenspoint Parkway, Suite 600
Hoffman Estates IL 60169
847.697.2640 Ph
www.walkerconsultants.com

ARCHITECTURAL

Studio Level 1

STUDIO LEVEL 1
1001 North Warren Street
Gary, IN 46403
219.951.0214 Ph
www.studiolevel1.com

Mount Prospect

MAPLE STREET PARKING DECK

MOUNT PROSPECT, IL

MARK	DATE	DESCRIPTION
		REVISIONS

SHEET ISSUE:	95% CONSTRUCTION DOCUMENTS
SHEET ISSUE DATE:	10/16/2019
PROJECT NO:	31-8504.00
DRAWN BY:	JWK
CHECKED BY:	DJM

COPYRIGHT © 2019. ALL RIGHTS RESERVED. NO PART OF THIS DOCUMENT MAY BE REPRODUCED IN ANY FORM OR BY ANY MEANS WITHOUT PERMISSION FROM WALKER CONSULTANTS.

SHEET TITLE:
TYPICAL DETAILS

S-501

10/17/2019 6:35:13 AM C:\Revit Projects\31-8504.00-MAPLE STREET PG-STRUCT_R19_jwkoppot.rvt

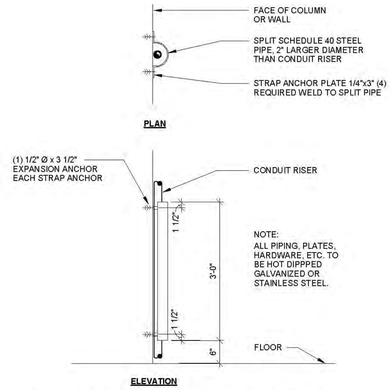

3 CONDUIT RISER GUARD DETAIL

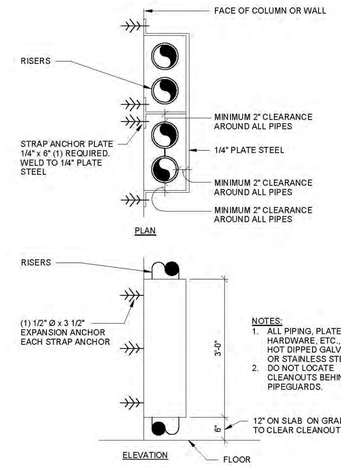

2 MULTIPLE RISER PIPE GUARD DETAIL

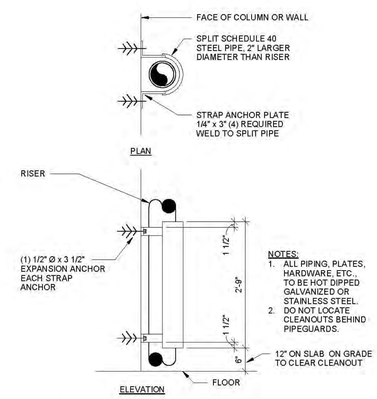

1 PIPE GUARD DETAIL

PRELIMINARY - DO NOT USE FOR CONSTRUCTION

PRIME DESIGNER

WALKER CONSULTANTS

2895 Greenspoint Parkway, Suite 600
Hoffman Estates IL 60169
847.697.2640 Ph
www.walkerconsultants.com

ARCHITECTURAL

Studio Level 1

STUDIO LEVEL 1
1001 North Warren Street
Gary, IN 46403
219.951.0214 Ph
www.studiolevel1.com

Mount Prospect

MAPLE STREET
PARKING DECK

MOUNT PROSPECT, IL

MARK	DATE	DESCRIPTION

REVISIONS

SHEET ISSUE:	95% CONSTRUCTION DOCUMENTS
SHEET ISSUE DATE:	10/16/2019
PROJECT NO:	31-8504.00
DRAWN BY:	JNK
CHECKED BY:	DJM

COPYRIGHT © 2019. ALL RIGHTS RESERVED. NO PART OF THIS DOCUMENT MAY BE REPRODUCED IN ANY FORM OR BY ANY MEANS WITHOUT PERMISSION FROM WALKER CONSULTANTS.

SHEET TITLE:
PIPE GUARDS AND BOLLARD DETAILS

S-502

10/17/2019 8:35:17 AM C:\Revit Projects\31-8504.00-MAPLE STREET PG-STRUCT_R19_jnkeppel.rvt

LOOSE STEEL LINTEL SCHEDULE (8" CMU WALL)	
SPAN	LINTEL SIZE
LESS THAN 3'-6"	(2) L 3 1/2 x 3 1/2 x 1/4
3'-6" TO 5'-0"	(2) L 4 x 3 1/2 x 1/4 (LLV)
5'-1" TO 7'-6"	(2) L 5 x 3 1/2 x 3/8 (LLV)
7'-7" TO 9'-11"	(2) L 6 x 3 1/2 x 3/8 (LLV)
10'-0" TO 16'-0"	W8 x 28 W/ PLATE 3/8 x 7 1/2 x CONT WELD TO W8
16'-1" TO 25'-0"	W16 x 40
25'-1" TO 28'-0"	W16 x 57

NOTES:
1. LINTEL ANGLES LENGTH EQUALS CLEAR SPAN PLUS 1'-4" FOR 8" CMU WALLS.
2. WELD ANGLES TOGETHER WITH 1/4" WELD FULL HEIGHT OF VERTICAL LEGS EACH END.
3. REINFORCE CMU BELOW W SHAPE WITH FULLY GROUTED CELL AND (2) #5 x CONT FULL HEIGHT.

7 CMU BLOCK LINTEL SCHEDULE

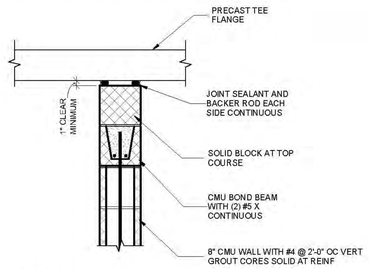

6 SLAB/WALL DETAIL

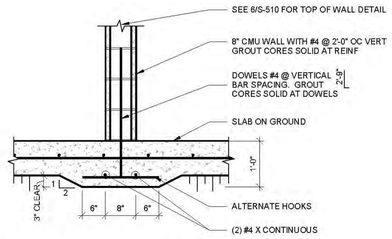

5 MASONRY WALL/SLAB DETAIL

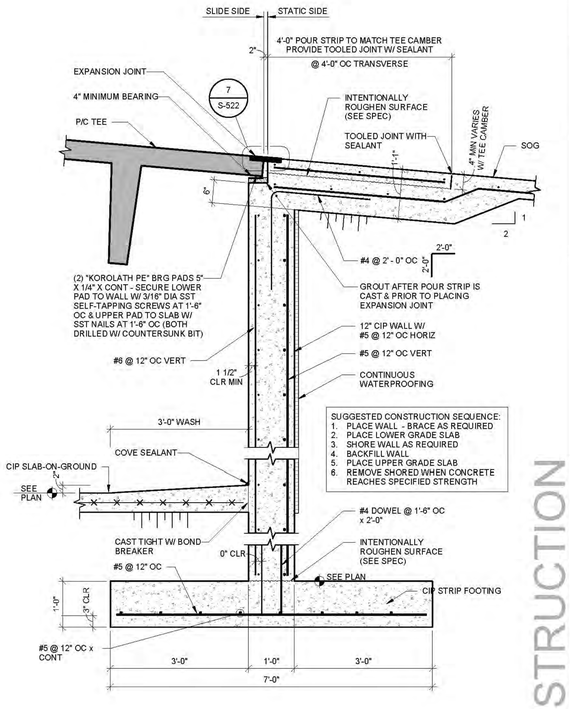

3 FOUNDATION WALL DETAIL

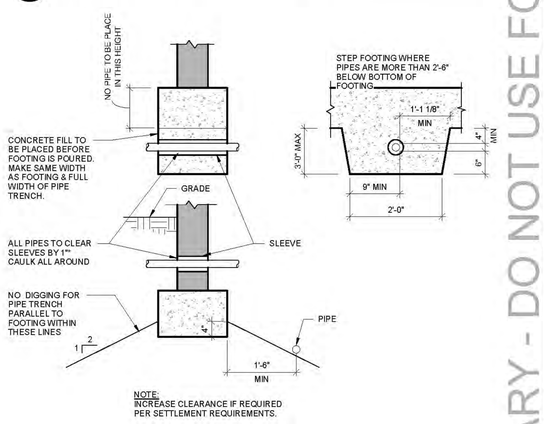

2 PIPE @ WALL & FOOTING DETAIL

9 SLAB/WALL DETAIL

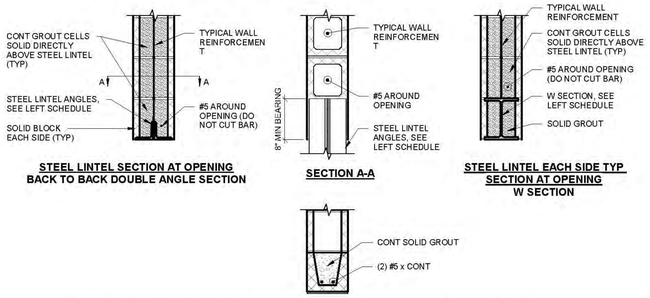

8 CMU BLOCK LINTEL AT OPENING DETAIL

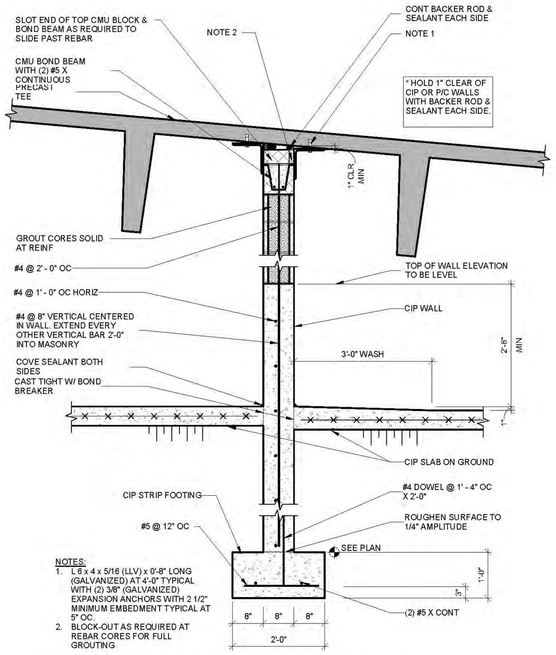

4 CMU FOUNDATION WALL DETAIL

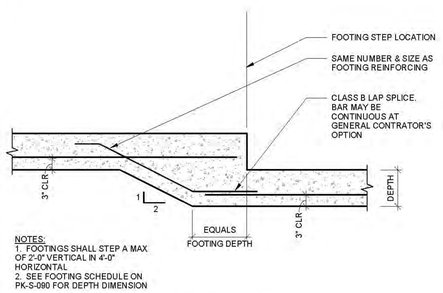

1 STEP FOOTING DETAIL

PRELIMINARY - DO NOT USE FOR CONSTRUCTION

PRIME DESIGNER
WALKER CONSULTANTS
2885 Greenspoint Parkway, Suite 600
Hoffman Estates IL 60169
847.697.2640 Ph
www.walkerconsultants.com

ARCHITECTURAL
Studio Level 1
STUDIO LEVEL 1
1001 North Warren Street
Gary, IN 46403
219.951.0214 Ph
www.studiolevel1.com

Mount Prospect

MAPLE STREET PARKING DECK

MOUNT PROSPECT, IL

MARK	DATE	DESCRIPTION
		REVISIONS

SHEET ISSUE:	95% CONSTRUCTION DOCUMENTS
SHEET ISSUE DATE:	10/16/2019
PROJECT NO:	31-0504.00
DRAWN BY:	JWK
CHECKED BY:	DJM

COPYRIGHT © 2019. ALL RIGHTS RESERVED. NO PART OF THIS DOCUMENT MAY BE REPRODUCED IN ANY FORM OR BY ANY MEANS WITHOUT PERMISSION FROM WALKER CONSULTANTS.

SHEET TITLE:
FOUNDATION SECTIONS AND DETAILS

S-510

10/17/2019 6:35:22 AM C:\Revit Projects\31-0504.00-MAPLE STREET PG-STRUCT_R19_jwkoppel.rvt

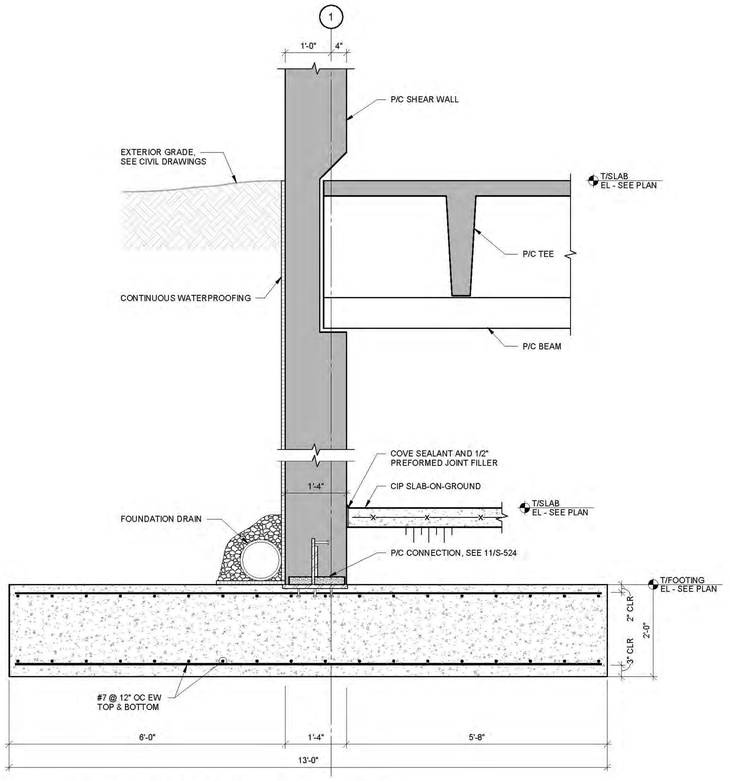

5 FOUNDATION WALL DETAIL

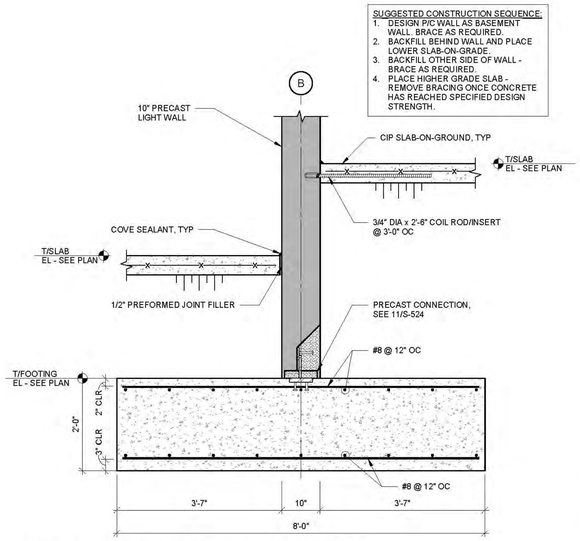

3 FOUNDATION WALL DETAIL

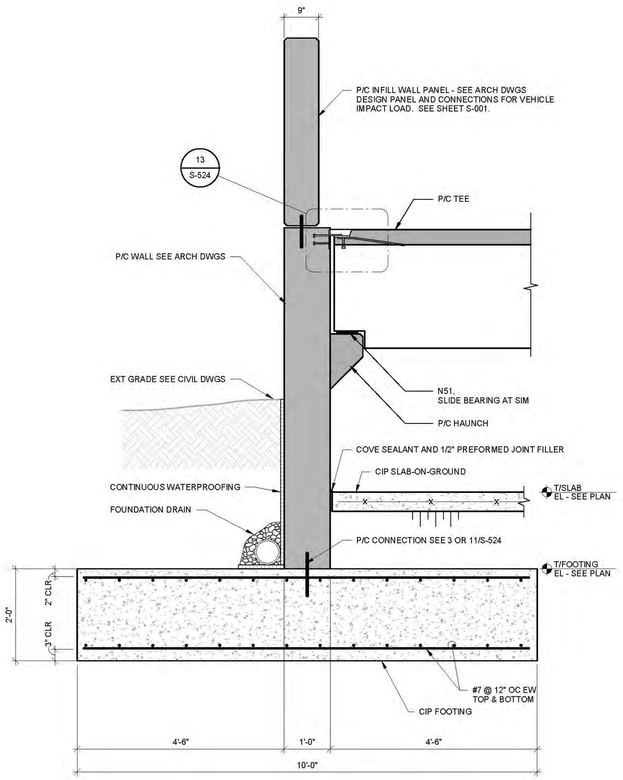

6 FOUNDATION WALL DETAIL

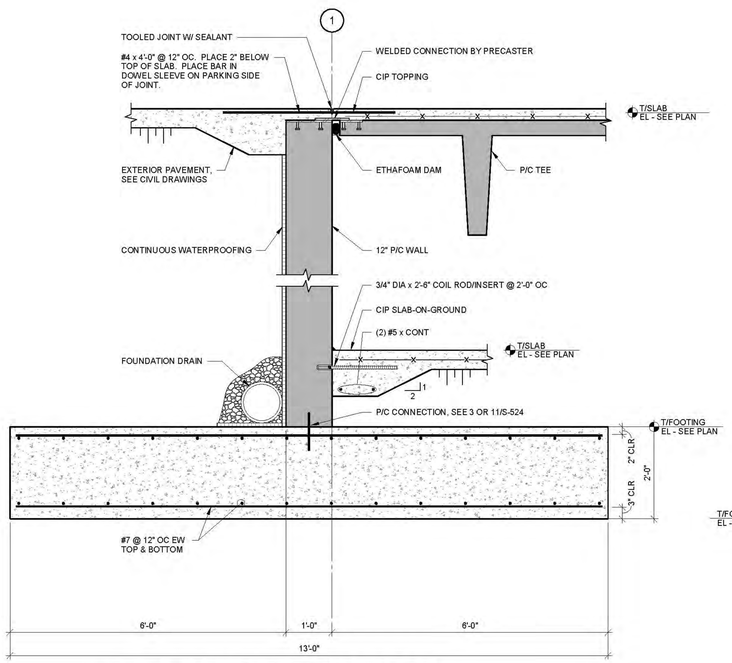

4 FOUNDATION WALL DETAIL

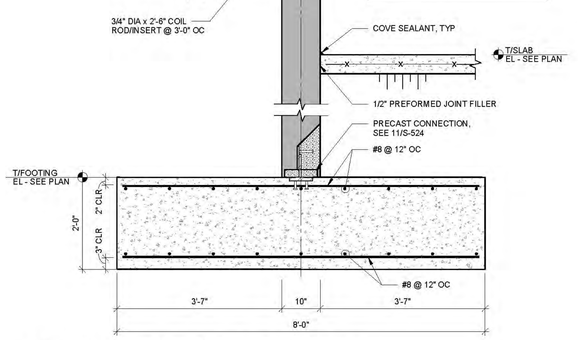

2 FOUNDATION WALL DETAIL

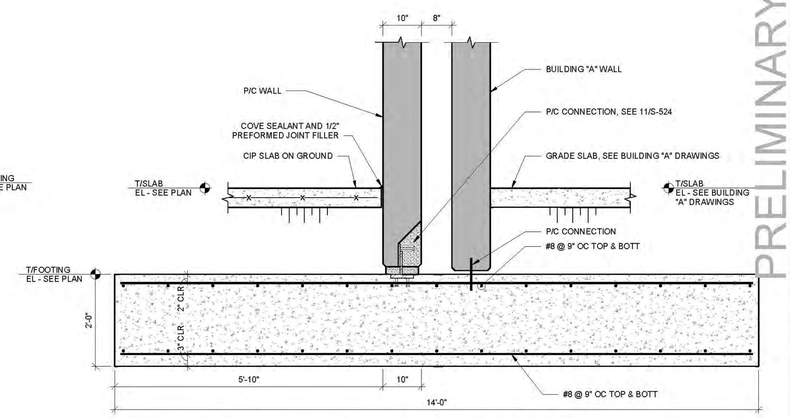

1 NORTH FOUNDATION WALL DETAIL

PRELIMINARY - DO NOT USE FOR CONSTRUCTION

PRIME DESIGNER

WALKER CONSULTANTS

2895 Greenspoint Parkway, Suite 600
Hoffman Estates IL 60169
847.697.2640 Ph
www.walkerconsultants.com

ARCHITECTURAL

Studio Level 1

STUDIO LEVEL 1
1001 North Warren Street
Gary, IN 46403
219.951.0214 Ph
www.studiolevel1.com

Mount Prospect

MAPLE STREET PARKING DECK

MOUNT PROSPECT, IL

MARK	DATE	DESCRIPTION
		REVISIONS

SHEET ISSUE:	95% CONSTRUCTION DOCUMENTS
SHEET ISSUE DATE:	10/16/2019
PROJECT NO:	31-8504.00
DRAWN BY:	JVK
CHECKED BY:	DJM

COPYRIGHT © 2019. ALL RIGHTS RESERVED. NO PART OF THIS DOCUMENT MAY BE REPRODUCED IN ANY FORM OR BY ANY MEANS WITHOUT PERMISSION FROM WALKER CONSULTANTS.

SHEET TITLE:
FOUNDATION SECTIONS AND DETAILS

S-511

10/17/2019 8:35:28 AM C:\Revit Projects\31-8504.00-MAPLE STREET PG-STRUCT_R19_jvkdappert.rvt

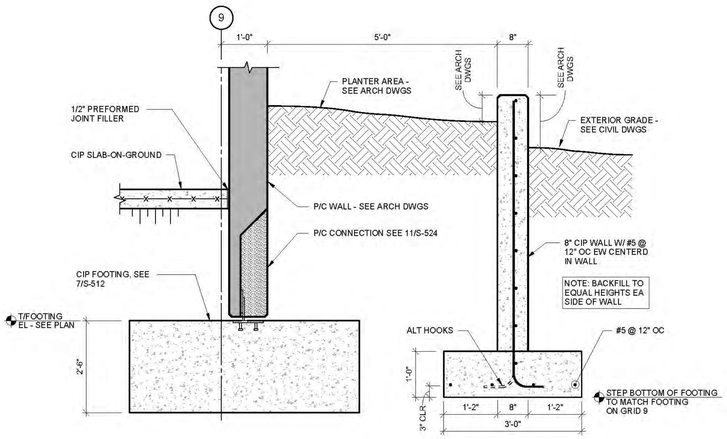

8 PLANTER WALL DETAIL

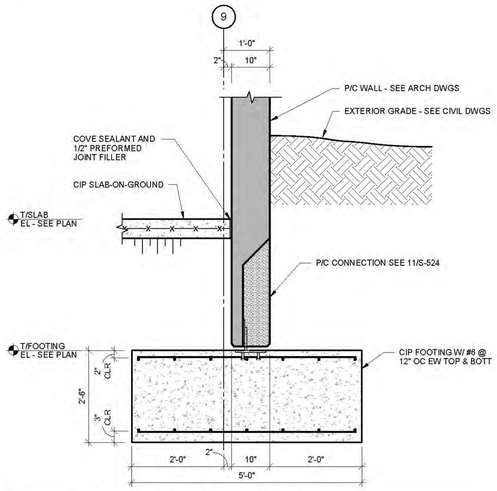

7 FOUNDATION WALL DETAIL

5 NOT USED

4 NOT USED

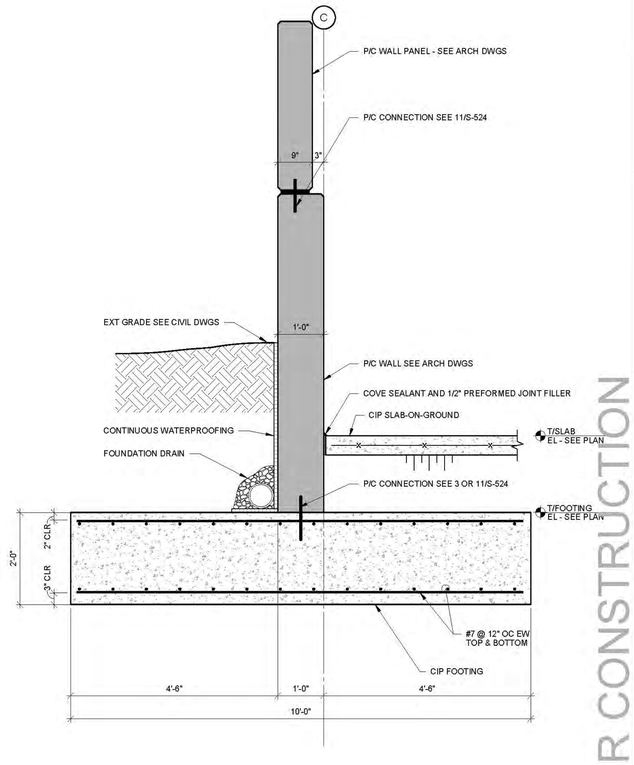

2 FOUNDATION WALL DETAIL

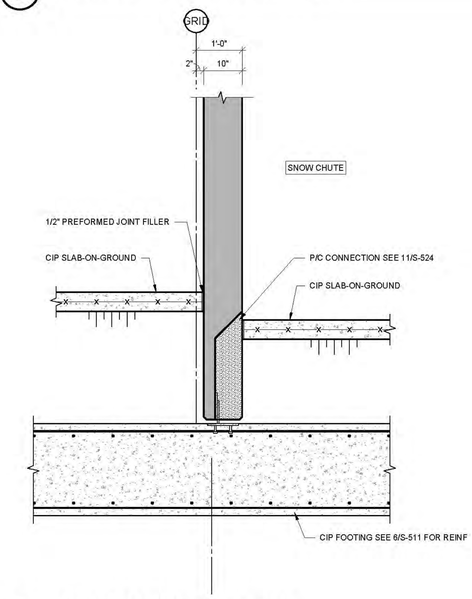

6 PRECAST WALL DETAIL

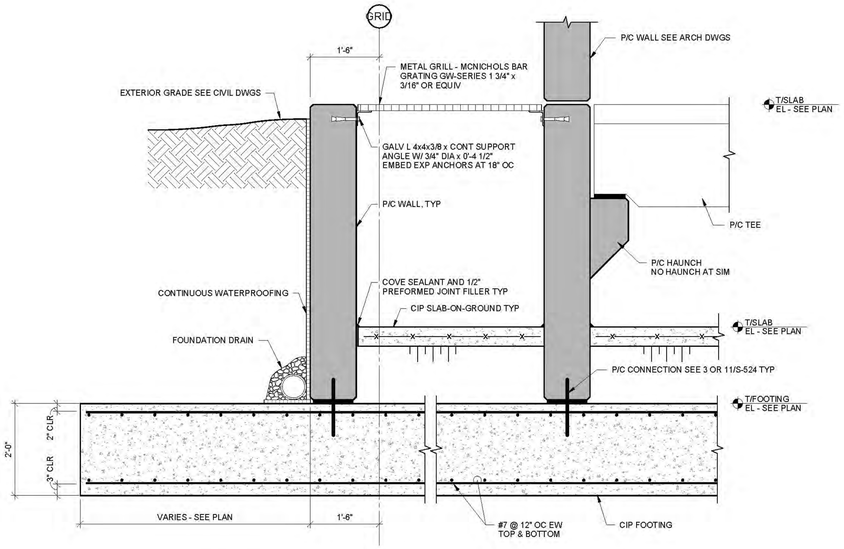

3 FOUNDATION WALL DETAIL

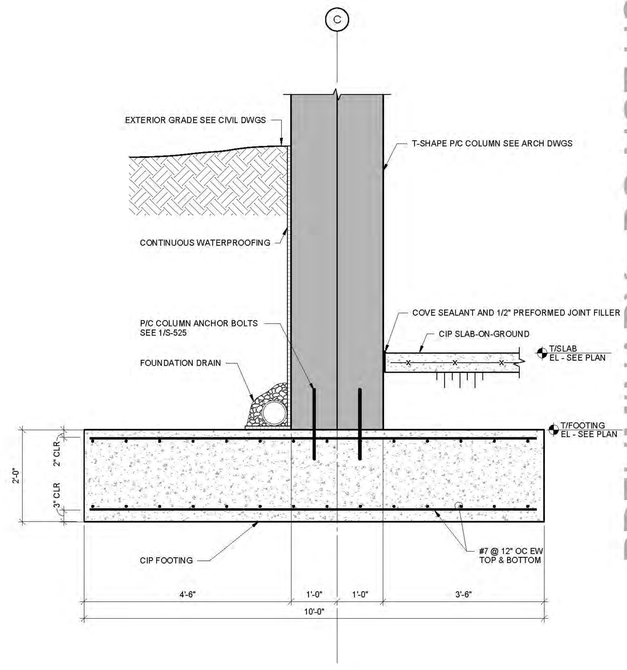

1 P/C COLUMN DETAIL AT GROUND TIER

PRELIMINARY - DO NOT USE FOR CONSTRUCTION

PRIME DESIGNER

WALKER CONSULTANTS

2885 Greenspoint Parkway, Suite 600
Hoffman Estates IL 60169
847.697.2640 Ph
www.walkerconsultants.com

ARCHITECTURAL

Studio Level 1

STUDIO LEVEL 1
1001 North Warren Street
Gary, IN 46403
219.951.0214 Ph
www.studiolevel1.com

Mount Prospect

MAPLE STREET PARKING DECK

MOUNT PROSPECT, IL

MARK	DATE	DESCRIPTION
REVISIONS		

SHEET ISSUE:	95% CONSTRUCTION DOCUMENTS
SHEET ISSUE DATE:	10/16/2019
PROJECT NO:	31-8504.00
DRAWN BY:	JIVK
CHECKED BY:	DJM

COPYRIGHT © 2019. ALL RIGHTS RESERVED. NO PART OF THIS DOCUMENT MAY BE REPRODUCED IN ANY FORM OR BY ANY MEANS WITHOUT PERMISSION FROM WALKER CONSULTANTS.

SHEET TITLE:
FOUNDATION SECTIONS AND DETAILS

S-512

10/17/2019 6:35:34 AM C:\Revit Projects\31-8504.00-MAPLE STREET PO-STRUCT_R19_jivkwappel.rvt

PRECAST EMBEDMENT SCHEDULE

PRODUCT	CONNECTION HARDWARE		EXCEPTIONS
TEE	BEARING PLATE	HDG	-
	EMBED AT TOP CONNECTION	HDG	-
	FLANGE WELDER EMBED	SS	-
	EMBED AT EXPANSION JOINT	HDG	-
	EMBED AT DIAPHRAGM CONNECTION	HDG	-
BEAM	BEARING PLATE	HDG	-
	EMBED TO TOP CONNECTION	HDG	-
	EMBED AT TOP CONNECTION (EXP)	HDG	-
INTERIOR SPANDREL	BEARING PLATE	HDG	-
	EMBED AT CONNECTION W/ COLUMN	HDG	-
	EMBED AT CONNECTION W/ WALL	HDG	-
	EMBED AT CONNECTION W/ TEE	HDG	-
EXTERIOR SPANDREL	BEARING PLATE	HDG	-
	EMBED AT CONNECTION W/ COLUMN	HDG	-
	EMBED AT CONNECTION W/ WALL	HDG	-
	EMBED AT CONNECTION W/ TEE	HDG	-
COLUMN	BASE PLATE AT FOUNDATION	PS	-
	BASE PLATE AT COLUMN SPLICE	HDG	-
	TOP PLATE / HAUNCH	HDG	-
	HAUNCH ASSEMBLY	HDG	-
	EMBED AT CONNECTION W/ TEE	HDG	-
	EMBED AT CONNECTION W/ EXT SPANDREL	HDG	-
	EMBED AT CONNECTION W/ INT SPANDREL	HDG	-
	EMBED AT CONNECTION W/ WALL	HDG	-
	EMBED AT CONNECTION W/ BEAM (EXP)	HDG	-
	EMBED AT CONNECTION W/ BEAM	HDG	-
STRUCTRUAL WALL	EMBED AT CONNECTION W/ TEE	HDG	-
AND SHEAR FRAME	EMBED AT CONNECTION W/ BEAM	HDG	-
	EMBED AT CONNECTION W/ BEAM (EXP)	HDG	-
	EMBED AT CONNECTION W/ WALL	HDG	-
	EMBED AT CONNECTION W/ COLUMN	HDG	-
	EMBED AT CONNECTION W/ FOUNDATION	HDG	-
	HAUNCH ASSEMBLY	HDG	-
ARCHITECTURAL WALL	EMBED AT CONNECTION W/ TEE	HDG	-
	EMBED AT CONNECTION W/ BEAM	HDG	-
	EMBED AT CONNECTION W/ BEAM (EXP)	HDG	-
	EMBED AT CONNECTION W/ WALL	HDG	-
	EMBED AT CONNECTION W/ COLUMN	HDG	-
	EMBED AT CONNECTION W/ FOUNDATION	HDG	-
STAIR WALL	EMBED AT CONNECTION W/ WALL	HDG	-
	EMBED AT CONNECTION W/ SLAB	HDG	-
FLAT SLABS	EMBED AT CONNECTION W/ BEAM	HDG	-
(RISER)	EMBED AT CONNECTION W/ COLUMN	HDG	-
	EMBED AT CONNECTION W/ SLAB	HDG	-
	BEARING PLATES	HDG	-
LOOSE MATERIAL	TEE TO TEE WELDER W/ COVER	SS	-
	TEE TO BEAM W/ COVER	HDG	-
	TEE TO SPANDREL (TOPPED WASH)	HDG	-
	TEE TO COLUMN W/ COVER	HDG	-
	TEE TO SHEAR WALL W/ COVER	HDG	-
	BEAM TOP	HDG	-
	BEAM BOTTOM (CUBE)	HDG	-
	SPANDREL TOP	HDG	-
	SPANDREL BOTTOM	HDG	-
	ANCHOR BOLTS	HDG	-
	OTHER FOUNDATION EMBEDS	HDG	-
	WALL TO WALL	HDG	-
SPECIAL INFORMATION	NOTES:		
	1. ALL CONNECTIONS HARDWARE EXPOSED OR WITHIN 1/2" OF SURFACE IN FINAL... CONDITION SHALL BE HOT DIP GALVANIZED.		
	2. REINFORCING BARS, STUDS, AND DEFORMED BAR ANCHORS WELDED TO STRUCTURAL SHAPES AS THE EMBEDED PART OF AN ASSEMBLY NEED NOT BE GALVANIZED.		
ABBREVIATIONS	PS = PLAIN STEEL	SS = STAINLESS STEEL	
	HDG = HOT DIPPED GALVANIZED	ZRC = ZINC RICH COATING	

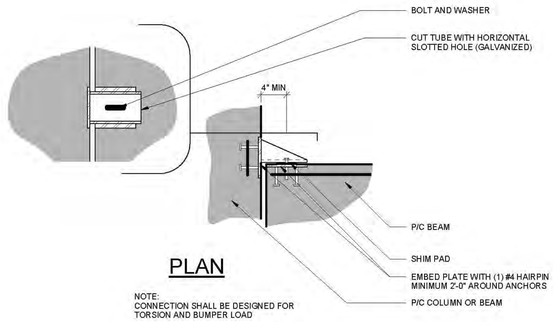

PLAN

NOTE:
CONNECTION SHALL BE DESIGNED FOR TORSION AND BUMPER LOAD

8 BEAM/COLUMN CONNECTION DETAIL PERFORMANCE DESIGN

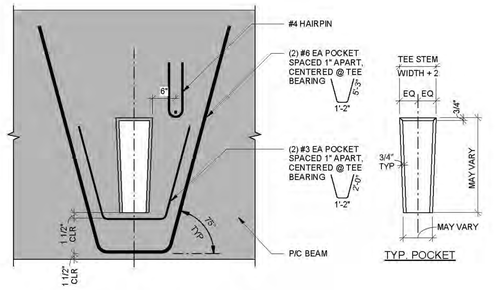

7 P/C BEAM DETAIL

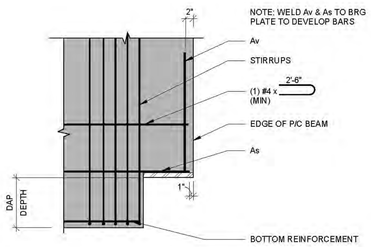

NOTES:
1. SEE PRECAST EMBED SCHEDULE FOR MATERIALS.
2. EQUIVALENT PREFABRICATED WWF ACCEPTABLE.

6 END OF BEAM REINFORCEMENT DETAIL

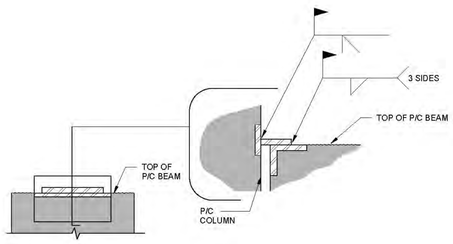

9 CONNECTION DETAIL PERFORMANCE DESIGN

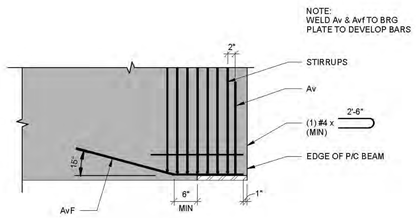

NOTES:
1. SEE PRECAST EMBED SCHEDULE FOR MATERIALS.
2. EQUIVALENT PREFABRICATED WWF ACCEPTABLE.

5 END OF BEAM REINFORCEMENT (UNDAPPED TEE) DETAIL

SHEET NOTES

PRECAST BEAM NOTES:

1. FOR GENERAL NOTES SEE SHEET S-001.
2. BEAM DESIGN IS PERFORMANCE DESIGN AND SHALL INCLUDE TYPE, NUMBER, AND LOCATION OF STRANDS AND/OR CONVENTIONAL REINFORCEMENT AS WELL AS LEDGE, SHEAR/TORSION AND END OF BEAM REINFORCEMENT. DESIGN SHALL ALSO INCLUDE ALL BEAM TO COLUMN (OR OTHER SUPPORT) CONNECTIONS. SEE SPECIFICATION SECTION 034100 FOR PRECAST CONCRETE.
3. APPLY MASTIC TO EACH STRAND AT ENDS OF BEAM.
4. FOR MEMBER SIZES AND OTHER INFORMATION SEE STRUCTURAL AND ARCHITECTURAL DETAILS.
5. SEE MECHANICAL AND ELECTRICAL DRAWINGS FOR ANY REQUIRED PENETRATIONS.
6. POCKETED BEAMS SHALL BE PRESTRESSED TO A MINIMUM PIA OF 150 psi.
7. FOR SEALANT REQUIREMENTS AT SPANDREL PANEL/BEAM/COLUMN INTERFACES SEE DETAILS 1, 2, 3, & S/S-522.
8. PROVIDE OPENINGS AT APPROXIMATELY MID-DEPTH OF STEMS OF INVERTED TEE (DOUBLE LEDGER) BEAMS. PLACE NO CLOSER THAN 9'-0" FROM END OF BEAM. COORDINATE SIZE AND LOCATION REQUIREMENTS WITH MECHANICAL AND ELECTRICAL.

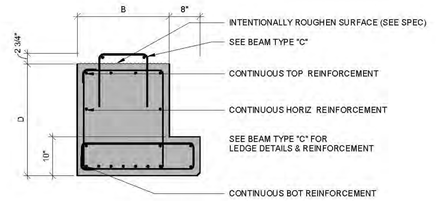

NOTE:
EQUIVALENT PREFABRICATED WWF ACCEPTABLE

4 BEAM TYPE "D"

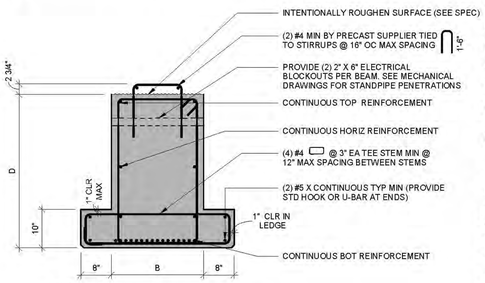

NOTE:
EQUIVALENT PREFABRICATED WWF ACCEPTABLE

3 BEAM TYPE "C"

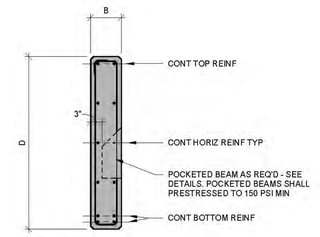

NOTE:
EQUIVALENT PREFABRICATED WWF ACCEPTABLE

2 BEAM TYPE "B"

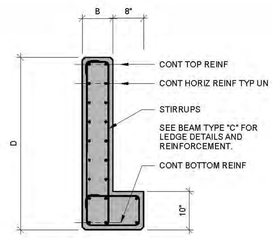

NOTE:
EQUIVALENT PREFABRICATED WWF ACCEPTABLE

1 BEAM TYPE "A"

PRELIMINARY - DO NOT USE FOR CONSTRUCTION

PRIME DESIGNER

WALKER CONSULTANTS

2895 Greenspoint Parkway, Suite 600
Hoffman Estates IL 60169
847.697.2640 Ph
www.walkerconsultants.com

ARCHITECTURAL

Studio Level 1

STUDIO LEVEL 1
1001 North Warren Street
Gary, IN 46403
219.951.0214 Ph
www.studiolevel1.com

Mount Prospect

MAPLE STREET PARKING DECK

MOUNT PROSPECT, IL

MARK	DATE	DESCRIPTION
		REVISIONS

SHEET ISSUE:	95% CONSTRUCTION DOCUMENTS
SHEET ISSUE DATE:	10/16/2019
PROJECT NO:	31-0504.00
DRAWN BY:	JVK
CHECKED BY:	DJM

COPYRIGHT © 2019. ALL RIGHTS RESERVED. NO PART OF THIS DOCUMENT MAY BE REPRODUCED IN ANY FORM OR BY ANY MEANS WITHOUT PERMISSION FROM WALKER CONSULTANTS.

SHEET TITLE:
PRECAST BEAM DETAILS

S-520

10/17/2019 6:35:41 AM C:\Revit Projects\31-0504.00-MAPLE STREET PG-STRUCT_R19_jvkwappert.rvt

SHEET NOTES

1. FOR GENERAL NOTES SEE SHEET S-001
2. TEE DESIGN IS PERFORMANCE DESIGN AND SHALL INCLUDE TYPE, NUMBER AND LOCATION OF STRANDS AS WELL AS SHEAR, FLANGE, AND END OF TEE REINFORCEMENT. SEE SPECIFICATION SECTION 034100 FOR PRECAST CONCRETE. MINIMUM PRECAST TEE FLANGE AND TOPPING REINFORCEMENT SHALL BE AS FOLLOWS:
   A. PRETOPPED TEE FLANGE: WWF 12X4 - W4XW4
   B. TOPPED TEE FLANGE: WWF 12X6 - W2.9XW2.9
   C. 3" TOPPING: WWF 12X4 - W4XW4
   D. PLACE REINFORCEMENT AT MID DEPTH OF FLANGE OR TOPPING.
   E. LARGER QUANTITY OF REINFORCEMENT SHALL BE ORIENTED IN TRANSVERSE DIRECTION.
   F. PROVIDE TOPPING WWF IN SHEETS NOT ROLLS.
   G. SUPPORT TOPPING IN WWF WITH CONTINUOUS BAR SUPPORTS SPACED AT 2'-0" OC MAX
3. FOR TEE/TEE JOINT DETAILS SEE 8, 9, & 10/S-521.

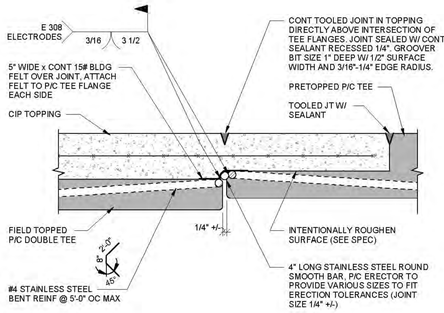

NOTES:
1. RECOMMEND USING GMAW PROCEDURE TO REDUCE SLAG.
2. TO ALLEVIATE CRACKING, CONSIDER USING SMALLER WELD PASSES.
3. OBSERVATION AND VERIFICATION OF WELDING PROCEDURES BY A TESTING AGENCY IS RECOMMENDED. PARTICULARLY FOR INITIAL INSTALLATION OF TEE-TO-TEE CONNECTIONS.

9 TEE/TEE JOINT DETAIL FIELD TOPPED TEES & PRETOPPED TEES

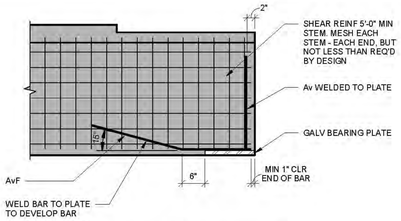

NOTES:
1. EQUIVALENT PREFABRICATED WWF ACCEPTABLE
2. SEE PRECAST EMBED SCHEDULE FOR MATERIALS

6 END OF TEE REINFORCEMENT (UNDAPPED TEE) DETAIL

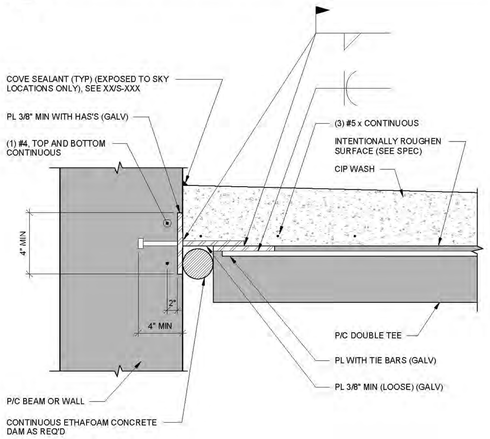

NOTES:
1. PROVIDE CONNECTION AT 4'-0" OC AT SPANDRELS, DECREASE SPACING AT SHEARWALLS AS REQUIRED FOR LATERAL LOADS
2. PRECASTER CAN PROPOSE ALTERNATE DETAIL FOR ENGINEER REVIEW.
3. TOUCH UP WELDS WITH MINIMUM 2 COATS ZINC PRIMER.

5 TOPPING DETAIL

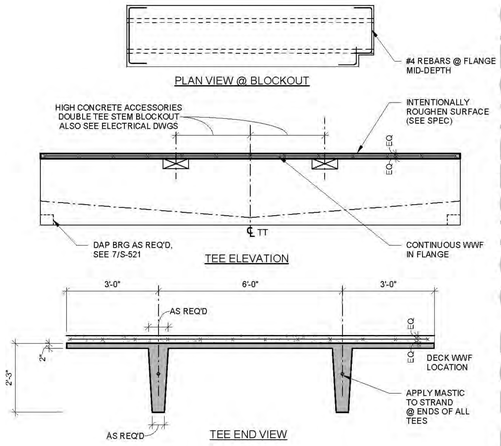

NOTE:
1. FOR FINISH SEE SPECIFICATIONS.
2. SEE 4/S-521 FOR 3" CIP TOPPING DETAILS.

2 TYPICAL PRECAST TEE DETAIL (FIELD TOPPED TEES)

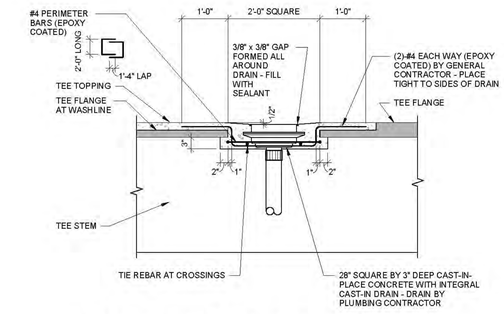

11 DRAIN INSTALLATION DETAIL P/C CONSTRUCTION

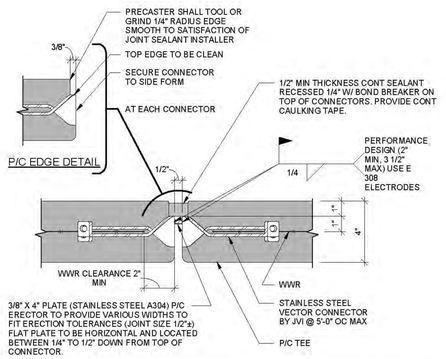

NOTES:
1. CENTER WELD AND FIELD PLATE ALONG FACEPLATE OF CONNECTOR. DO NOT WELD AT CORNERS.
2. CAUTION: DO NOT OVER WELD; 3 1/2" MAXIMUM WELD LENGTH. TOO MUCH WELDING HEAT WILL CRACK THE TEE FLANGES. PRECAST ERECTOR SHALL BE RESPONSIBLE FOR COST OF REPAIRING AND RESEALING CRACKED CONCRETE AROUND WELDS FOR A PERIOD OF TWO YEARS AFTER FINAL COMPLETION OF STRUCTURE.
3. RECOMMEND USING GMAW PROCEDURES TO REDUCE SLAG.
4. TO ALLEVIATE CRACKING, CONSIDER USING SMALLER WELD PASSES.
5. OBSERVATION AND VERIFICATION OF WELDING PROCEDURES BY A TESTING AGENCY OR MANUFACTURER IS RECOMMENDED, PARTICULARLY FOR INITIAL INSTALLATION OF TEE-TO-TEE CONNECTIONS.

8 TEE/TEE JOINT DETAIL AT PRETOPPED TEES

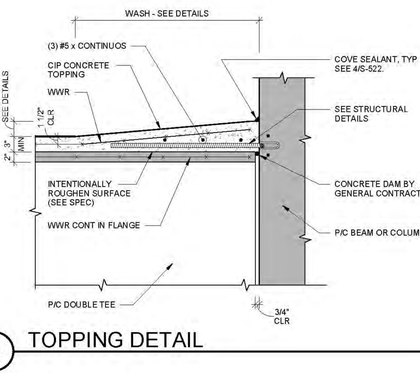

4 TOPPING DETAIL

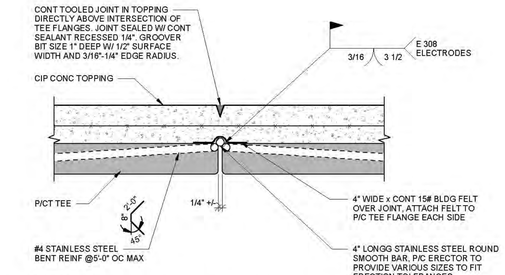

NOTES:
1. RECOMMEND USING GMAW PROCEDURES TO REDUCE SLAG.
2. TO ALLEVIATE CRACKING, CONSIDER USING SMALLER WELD PASSES.
3. OBSERVATION AND VERIFICATION OF WELDING PROCEDURES BY A TESTING AGENCY IS RECOMMENDED, PARTICULARLY FOR INITIAL INSTALLATION OF TEE-TO-TEE CONNECTIONS.

10 TEE/TEE JOINT DETAIL FIELD TOPPED TEES & POURSTRIPS

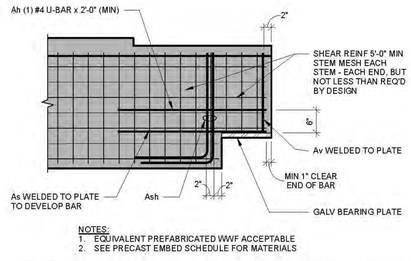

NOTES:
1. EQUIVALENT PREFABRICATED WWF ACCEPTABLE
2. SEE PRECAST EMBED SCHEDULE FOR MATERIALS

7 END OF TEE REINFORCEMENT (DAPPED TEE) DETAIL

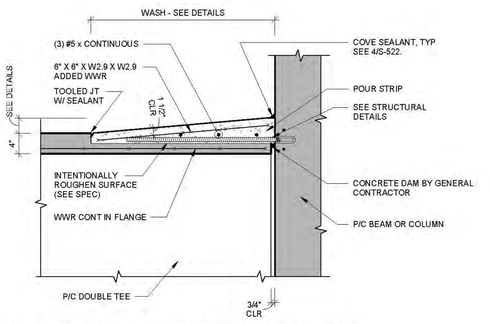

3 TYPICAL POUR STRIP DETAIL

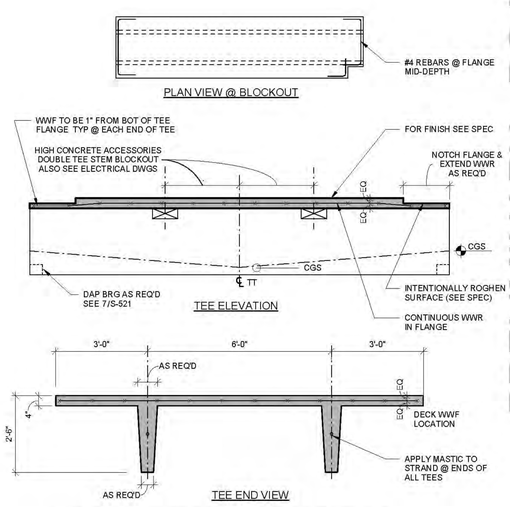

1 TYPICAL PRECAST TEE DETAIL (PRETOPPED TEES)

PRELIMINARY - DO NOT USE FOR CONSTRUCTION

PRIME DESIGNER

WALKER CONSULTANTS

2895 Greenspoint Parkway, Suite 600
Hoffman Estates IL 60169
847.697.2640 Ph
www.walkerconsultants.com

ARCHITECTURAL

Studio Level 1

STUDIO LEVEL 1
1001 North Warren Street
Gary, IN 46403
219.951.0214 Ph
www.studiolevel1.com

Mount Prospect

MAPLE STREET PARKING DECK

MOUNT PROSPECT, IL

MARK	DATE	DESCRIPTION
		REVISIONS

SHEET ISSUE:	95% CONSTRUCTION DOCUMENTS
SHEET ISSUE DATE:	10/16/2019
PROJECT NO:	31-0504.00
DRAWN BY:	JVK
CHECKED BY:	DJM

COPYRIGHT © 2019. ALL RIGHTS RESERVED. NO PART OF THIS DOCUMENT MAY BE REPRODUCED IN ANY FORM OR BY ANY MEANS WITHOUT PERMISSION FROM WALKER CONSULTANTS.

SHEET TITLE:
PRECAST TEE DETAILS

S-521

10/17/2019 6:35:46 AM C:\Revit Projects\31-0504.00-MAPLE STREET PDS-STRUCT_R19_jvkstappert.rvt

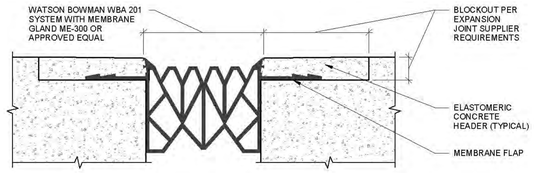

7 ELASTOMERIC CONC EDGED, EXTRUDED RUBBER EJ DETAIL

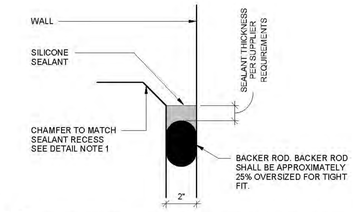

NOTE:
1. WHEN JOINT WIDTH IS 0"-1", RECESS SEALANT 1/4". JOINTS 1"-3". RECESS SEALANT 3/8"

6 FIELD APPLIED SILICONE SEALANT EXPANSION JOINT DETAIL

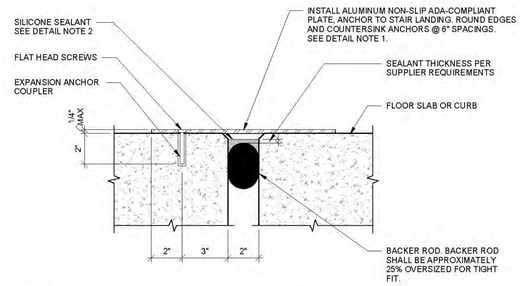

NOTES:
1. INSTALL ALUMINUM TREAD PLATES WITH A MINIMUM NUMBER OF BUTT JOINTS. JOINTS MUST BE EVEN AND FLUSH.
2. WHEN JOINT WIDTH IS 0"-1", RECESS SEALANT 1/4". JOINTS 1"-3". RECESS SEALANT 3/8"

8 FIELD APPLIED SILICONE SEALANT EXPANSION JOINT DETAIL

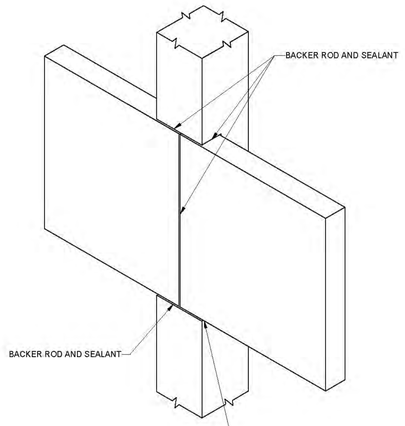

5 EXTERIOR FACADE SEALANT

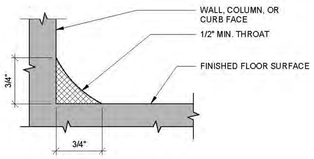

NOTES:
1. PREPARE & ALLOW FOR PRIMER TO CURE PROPERLY PRIOR TO INSTALLING SEALANT.
2. SEE SPECIFICATIONS FOR APPROVED MATERIALS.
3. DETAIL NOT TO SCALE.

4 COVE SEALANT

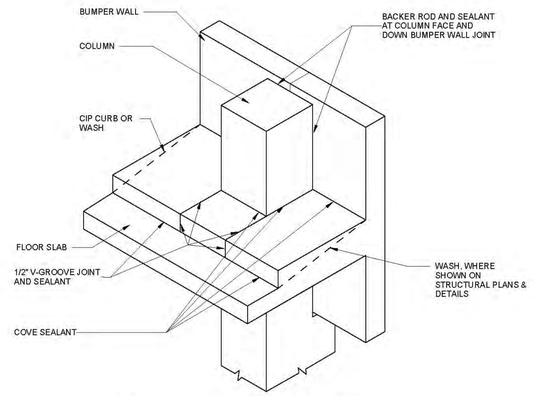

NOTES:
1. TOOLED JOINT AND SEALANT IN CIP WASH AT ALL P/C JOINTS BELOW TYP.
2. DETAIL SIMILAR AT SHEARWALLS AND WALL PANELS.

3 INSIDE FACE OF WALL/CURB/COLUMN SEALANT TOP TIER ONLY

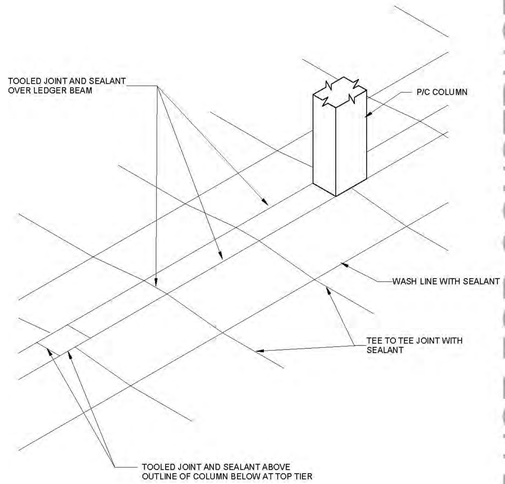

2 SEALANT ISOMETRIC

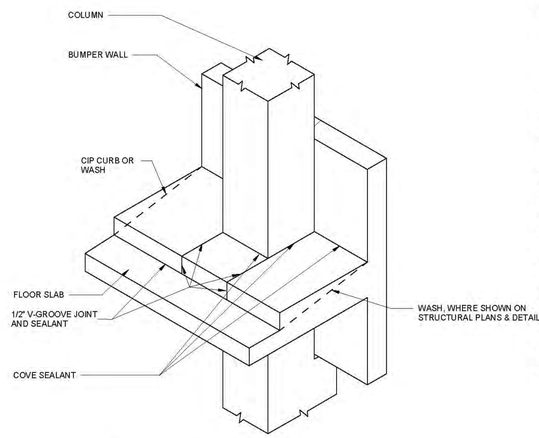

NOTES:
1. TOOLED JOINT AND SEALANT IN CIP WASH AT ALL P/C JOINTS BELOW TYP.
2. DETAIL SIMILAR AT SHEARWALLS AND WALL PANELS

1 INSIDE FACE OF WALL/CURB/COLUMN SEALANT TYPICAL AT LOWER LEVELS

PRELIMINARY - DO NOT USE FOR CONSTRUCTION

PRIME DESIGNER
WALKER CONSULTANTS
2885 Greenspoint Parkway, Suite 600
Hoffman Estates IL 60169
847.697.2640 Ph
www.walkerconsultants.com

ARCHITECTURAL
Studio Level 1
STUDIO LEVEL 1
1001 North Warren Street
Gary, IN 46403
219.951.0214 Ph
www.studiolevel1.com

Mount Prospect

MAPLE STREET PARKING DECK

MOUNT PROSPECT, IL

MARK	DATE	DESCRIPTION
REVISIONS		

SHEET ISSUE:	95% CONSTRUCTION DOCUMENTS
SHEET ISSUE DATE:	10/16/2019
PROJECT NO:	31-8504.00
DRAWN BY:	JVK
CHECKED BY:	DJH

COPYRIGHT © 2019. ALL RIGHTS RESERVED. NO PART OF THIS DOCUMENT MAY BE REPRODUCED IN ANY FORM OR BY ANY MEANS WITHOUT PERMISSION FROM WALKER CONSULTANTS.

SHEET TITLE:
WATERPROOFING DETAILS

S-522

10/17/2019 6:35:51 AM C:\Revit Projects\31-8504.00-MAPLE STREET PG-STRUCT_R19_jvkoppel.rvt

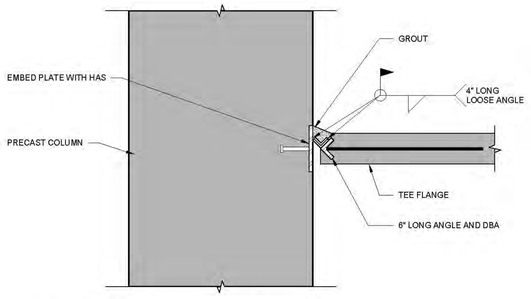

14 CONNECTION DETAIL

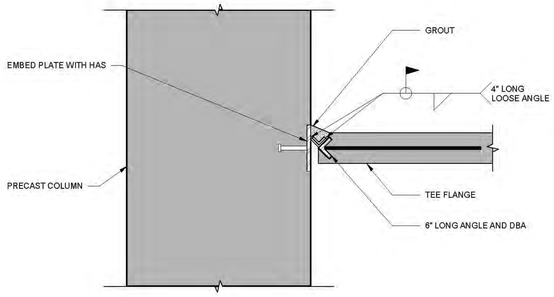

12 CONNECTION DETAIL

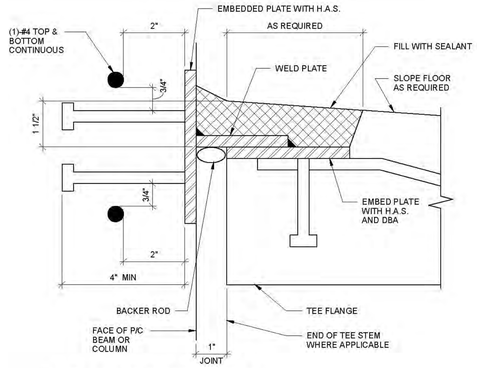

9 CONNECTION DETAIL
PRETOPPED WASH

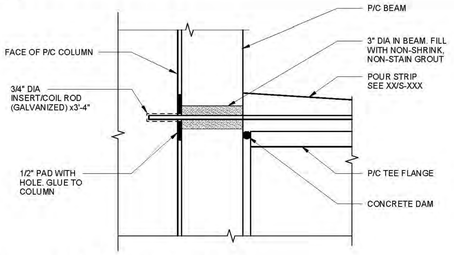

8 CONNECTION DETAIL

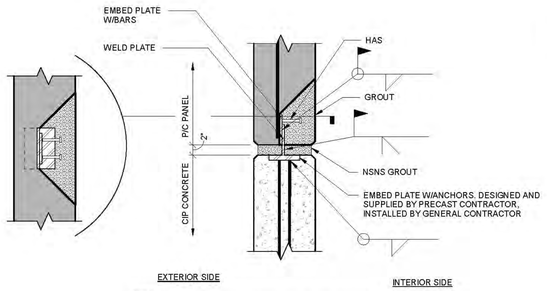

NOTE:
1. PRECAST CONTRACTOR'S OPTION TO USE NMB SPLICES.
2. SCHEDULE FOR MATERIALS

11 CONNECTION DETAIL

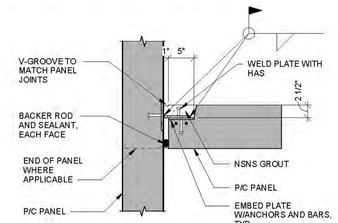

NOTES:
1. (2) CONNECTIONS MINIMUM PER PANEL
2. SEE PRECAST EMBEDMENT SCHEDULE FOR MATERIALS.

7 VERTICAL PANEL/PANEL CONNECTION

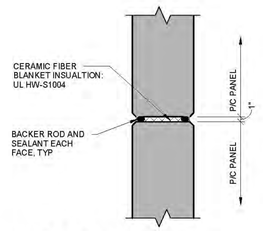

PANEL/PANEL DETAIL
FIRE RATED JOINT

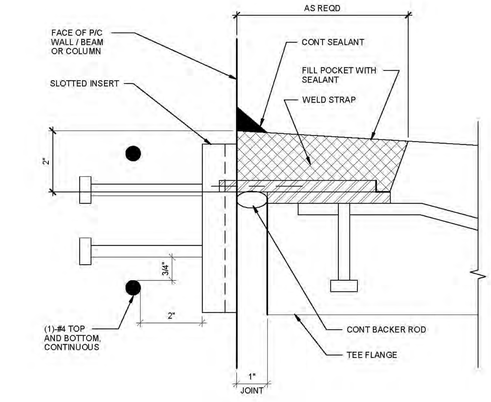

13 CONNECTION DETAIL

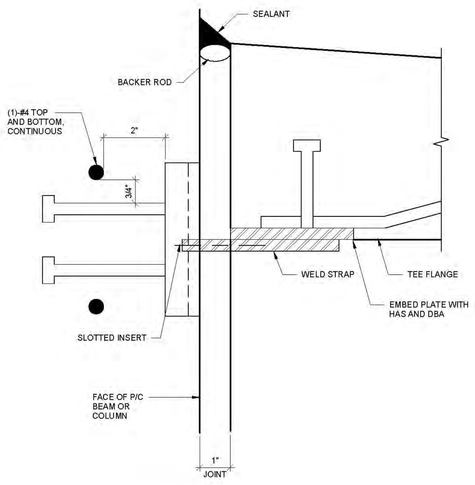

10 CONNECTION DETAIL

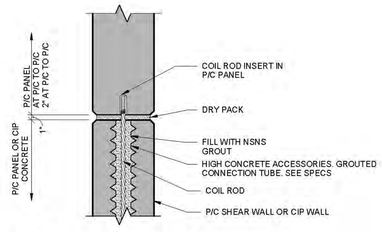

5 CONNECTION DETAIL

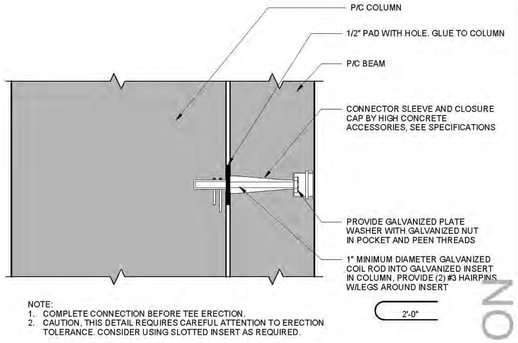

NOTE:
1. COMPLETE CONNECTION BEFORE TEE ERECTION.
2. CAUTION, THIS DETAIL REQUIRES CAREFUL ATTENTION TO ERECTION TOLERANCE. CONSIDER USING SLOTTED INSERT AS REQUIRED.

4 CONNECTION DETAIL

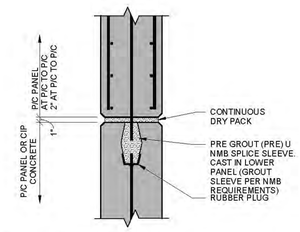

3 CONNECTION DETAIL

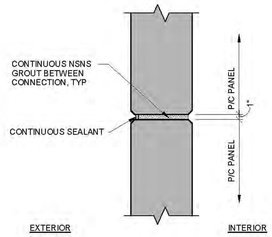

2 HORIZONTAL PANEL/PANEL DETAIL

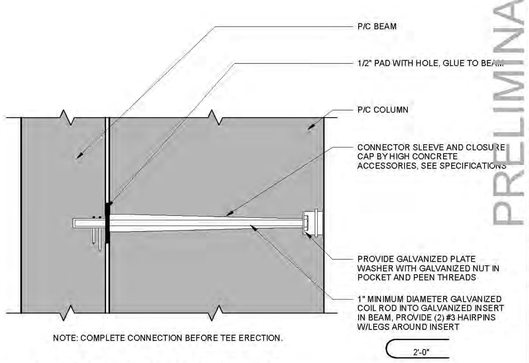

NOTE: COMPLETE CONNECTION BEFORE TEE ERECTION.

1 CONNECTION DETAIL

PRELIMINARY - DO NOT USE FOR CONSTRUCTION

PRIME DESIGNER
WALKER CONSULTANTS
2895 Greenspoint Parkway, Suite 600
Hoffman Estates IL 60169
847.697.2640 Ph
www.walkerconsultants.com

ARCHITECTURAL
Studio Level 1
STUDIO LEVEL 1
1001 North Warren Street
Gary, IN 46403
219.951.0214 Ph
www.studiolevel1.com

Mount Prospect

MAPLE STREET PARKING DECK

MOUNT PROSPECT, IL

MARK	DATE	DESCRIPTION
REVISIONS		

SHEET ISSUE:	95% CONSTRUCTION DOCUMENTS
SHEET ISSUE DATE:	10/18/2019
PROJECT NO:	31-8504.00
DRAWN BY:	JVK
CHECKED BY:	DJM

COPYRIGHT © 2019. ALL RIGHTS RESERVED. NO PART OF THIS DOCUMENT MAY BE REPRODUCED IN ANY FORM OR BY ANY MEANS WITHOUT PERMISSION FROM WALKER CONSULTANTS.

SHEET TITLE:
TYPICAL PRECAST CONNECTION DETAILS

S-524

10/17/2019 6:35:56 AM C:\Revit Projects\31-8504.00-MAPLE STREET PS-STRUCT_R19_jvkeppel.rvt

SHEET NOTES

1. FOR GENERAL NOTES SEE SHEET S-001.
2. COLUMN DESIGN IS PERFORMANCE DESIGN AND SHALL INCLUDE TYPE, NUMBER AND LOCATION OF VERTICAL REINFORCEMENT AND TIES. DESIGN SHALL ALSO INCLUDE BASE, POCKET, AND HAUNCH REINFORCEMENT. SEE SPECIFICATION SECTION 034100 FOR PRECAST CONCRETE.
3. PERFORMANCE DESIGN SHALL INCLUDE EFFECTS DUE TO VOLUME CHANGE OF THE STRUCTURE. COLUMNS SHALL BE DESIGNED ASSUMING PINNED BASE CONDITIONS.
4. FOR COLUMN SIZES SEE PLAN DETAILS ON SHEET S-5xx.
5. FOR COLUMN BASE, POCKET, AND HAUNCH DETAILS SEE S-525.
6. PROVIDE #5 MIN VERTICAL AT EACH CORNER BETWEEN POCKETS TYP.
7. MINIMUM COLUMN TIES SHALL BE #4 GRADE 60 CLOSED TIER AS FOLLOWS:
   A. AT 16" OC (MAX SPACING) TYP AND FOR ADDED TIES AT REINFORCEMENT BELOW AND BETWEEN POCKETS.
   B. ADD (4) TIES @ 3" OC BELOW EACH POCKET
   C. ADD (2) TIES @ 3" OC ABOVE EACH POCKET
   D. ADD (4) TIES @ 3" OC @ TOP & BOTTOM OF COLUMN
   E. ADD (3) TIES @ 3" OC ABOVE & BELOW HAUNCHES
   F. ADD (1) TIE ABOVE & BELOW COIL ROD INSERTS.

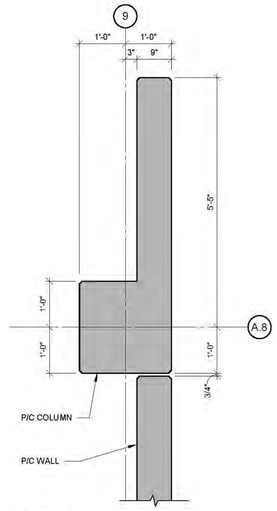

11 PLAN DETAIL

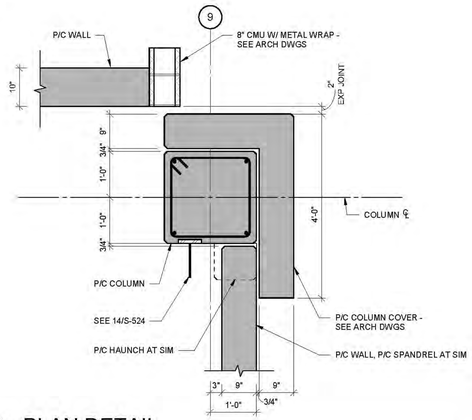

10 PLAN DETAIL

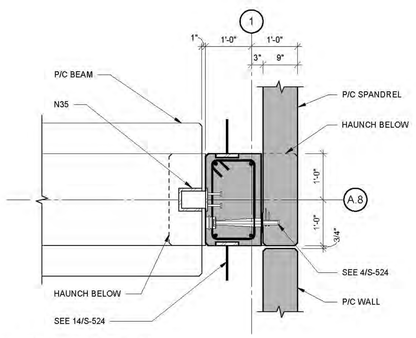

12 PLAN DETAIL

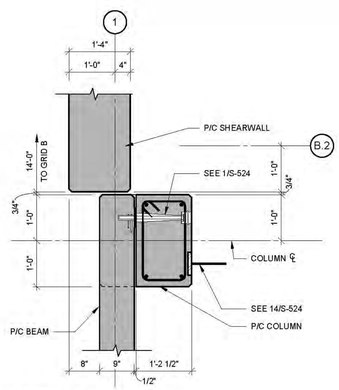

9 PLAN DETAIL

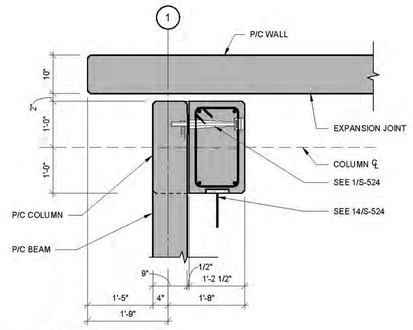

8 PLAN DETAIL

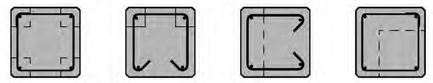

NOTE: MAIN REINFORCING NOT SHOWN FOR CLARITY

7 DIAGRAM FOR ADDED TIES BETWEEN POCKETS

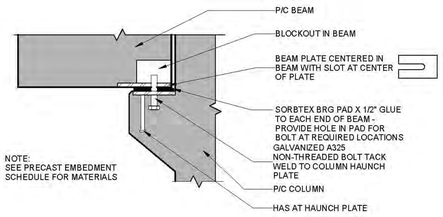

6 PRECAST CONNECTION DETAIL

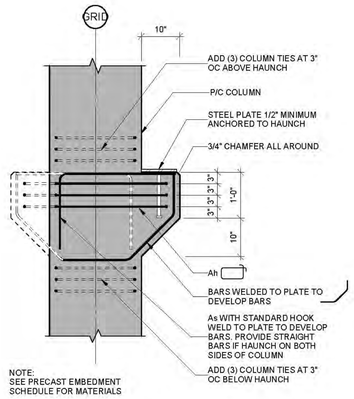

5 PRECAST HAUNCH DETAIL

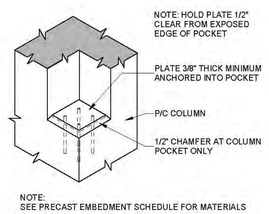

4 PRECAST COLUMN POCKET

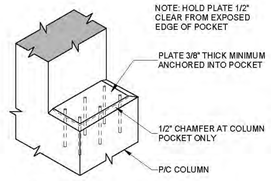

NOTE:
SEE PRECAST EMBEDMENT SCHEDULE FOR MATERIALS

3 PRECAST COLUMN POCKET

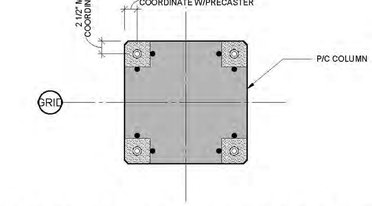

2 PRECAST COLUMN PLAN DETAIL

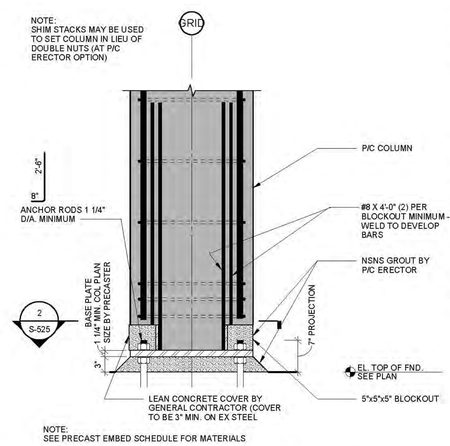

NOTE:
SEE PRECAST EMBED SCHEDULE FOR MATERIALS

1 PRECAST COLUMN BASE DETAIL

PRELIMINARY - DO NOT USE FOR CONSTRUCTION

PRIME DESIGNER

WALKER CONSULTANTS

2895 Greenspoint Parkway, Suite 600
Hoffman Estates IL 60169
847.697.2640 Ph
www.walkerconsultants.com

ARCHITECTURAL

Studio Level 1

STUDIO LEVEL 1
1001 North Warren Street
Gary, IN 46403
219.951.0214 Ph
www.studiolevel1.com

Mount Prospect

MAPLE STREET PARKING DECK

MOUNT PROSPECT, IL

MARK	DATE	DESCRIPTION
		REVISIONS

SHEET ISSUE:	95% CONSTRUCTION DOCUMENTS
SHEET ISSUE DATE:	10/16/2019
PROJECT NO:	31-5504.00
DRAWN BY:	JVK
CHECKED BY:	DJM

COPYRIGHT © 2019. ALL RIGHTS RESERVED. NO PART OF THIS DOCUMENT MAY BE REPRODUCED IN ANY FORM OR BY ANY MEANS WITHOUT PERMISSION FROM WALKER CONSULTANTS.

SHEET TITLE:
PRECAST COLUMN DETAILS

S-525

10/17/2019 6:36:02 AM C:\Revit Projects\31-5504.00-MAPLE STREET PG-STRUCT_R19_jvkkappel.rvt

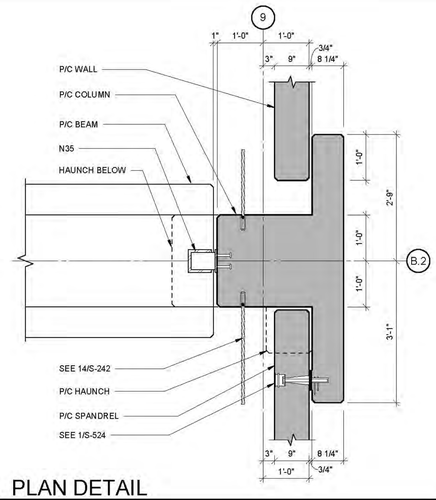

13 PLAN DETAIL

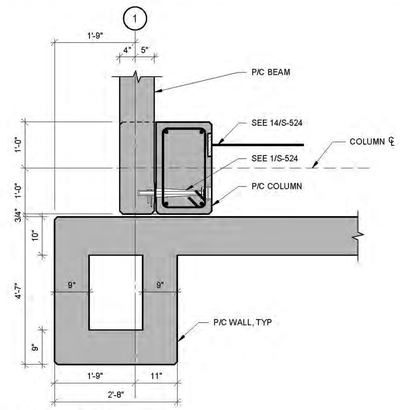

12 PLAN DETAIL

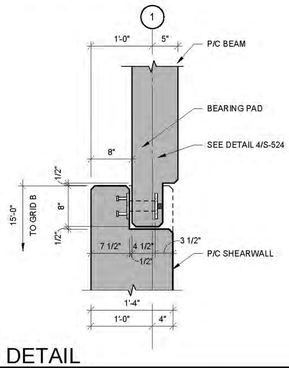

11 PLAN DETAIL

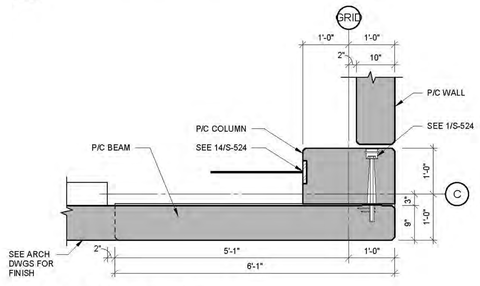

10 PLAN DETAIL

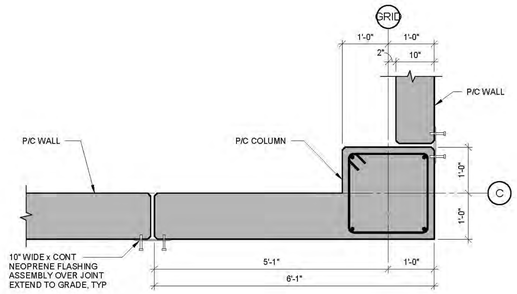

9 PLAN DETAIL

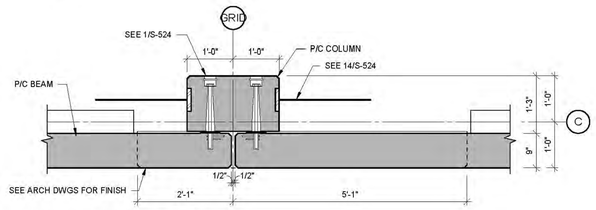

8 PLAN DETAIL

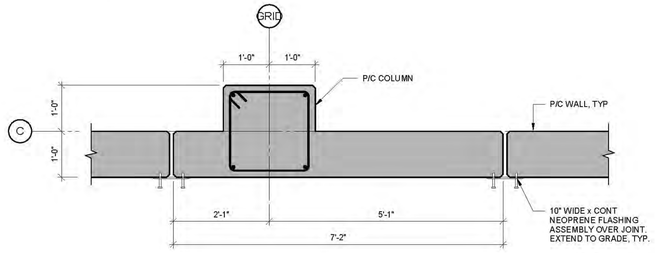

7 PLAN DETAIL

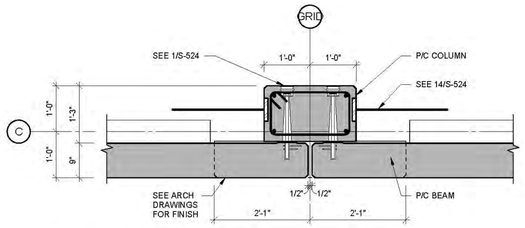

6 PLAN DETAIL

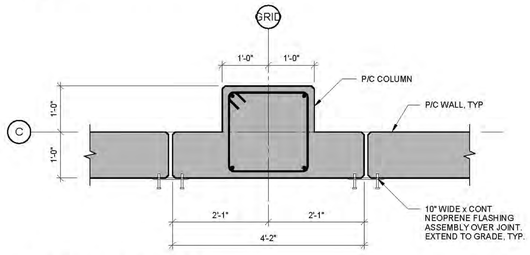

5 PLAN DETAIL

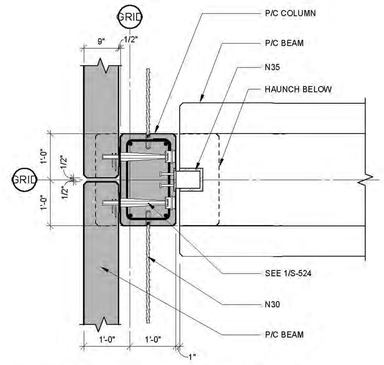

4 PRECAST COLUMN PLAN DETAIL

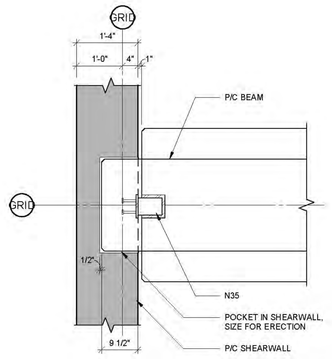

3 PRECAST WALL/BEAM PLAN DETAIL

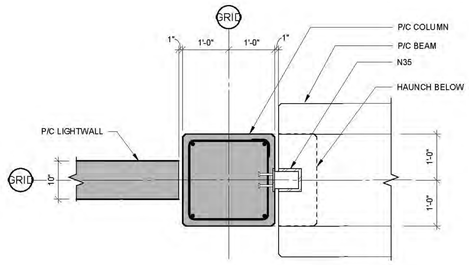

2 PLAN DETAIL

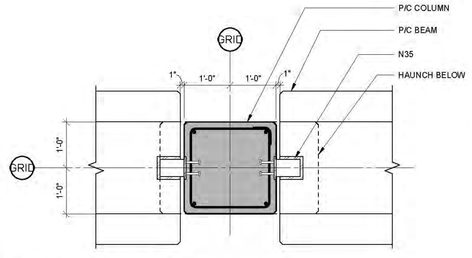

1 PLAN DETAIL

PRELIMINARY - DO NOT USE FOR CONSTRUCTION

PRIME DESIGNER

WALKER CONSULTANTS

2895 Greenspoint Parkway, Suite 600
Hoffman Estates IL 60169
847.697.2640 Ph
www.walkerconsultants.com

ARCHITECTURAL

Studio Level 1

STUDIO LEVEL 1
1001 North Warren Street
Gary, IN 46403
219.951.0214 Ph
www.studiolevel1.com

Mount Prospect

MAPLE STREET
PARKING DECK

MOUNT PROSPECT, IL

MARK	DATE	DESCRIPTION
		REVISIONS
SHEET ISSUE:		95% CONSTRUCTION DOCUMENTS
SHEET ISSUE DATE:		10/16/2019
PROJECT NO:		31-8504.00
DRAWN BY:		JVK
CHECKED BY:		DJM

COPYRIGHT © 2019. ALL RIGHTS RESERVED. NO PART OF THIS DOCUMENT MAY BE REPRODUCED IN ANY FORM OR BY ANY MEANS WITHOUT PERMISSION FROM WALKER CONSULTANTS.

SHEET TITLE:
COLUMN PLAN DETAILS

S-526

10/17/2019 6:36:08 AM C:\Revit Projects\31-8504.00-MAPLE STREET PS-STRUCT_R19_jvkeppel.rvt

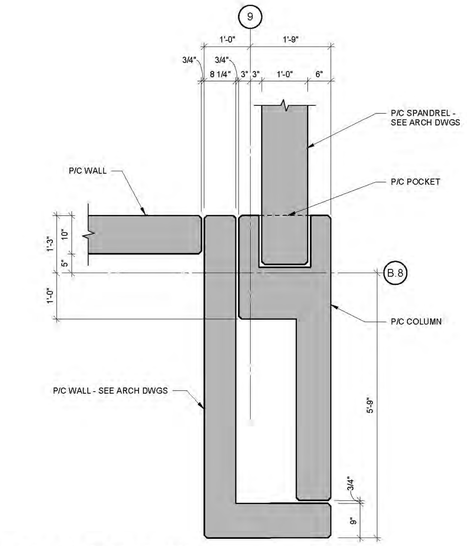

3 PLAN DETAIL

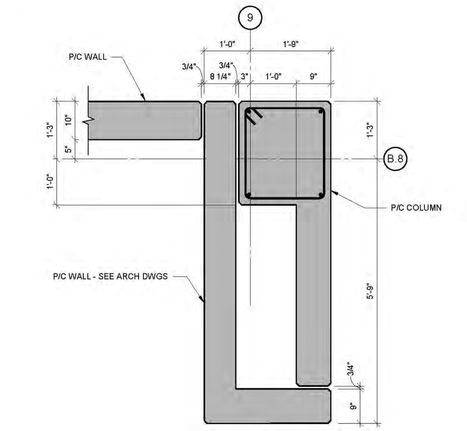

2 PLAN DETAIL

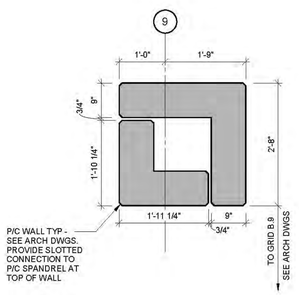

4 PLAN DETAIL

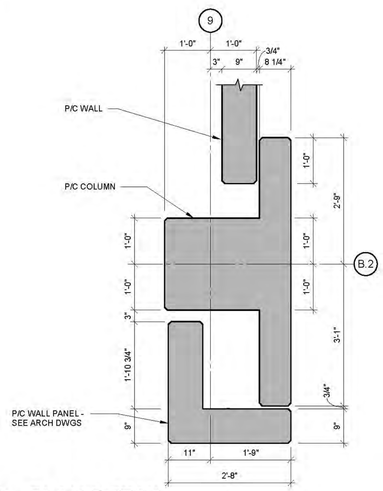

1 PLAN DETAIL

PRELIMINARY - DO NOT USE FOR CONSTRUCTION

PRIME DESIGNER

WALKER CONSULTANTS

2895 Greenspoint Parkway, Suite 600
Hoffman Estates IL 60169
847.697.2640 Ph
www.walkerconsultants.com

ARCHITECTURAL

Studio Level 1

STUDIO LEVEL 1
1001 North Warren Street
Gary, IN 46403
219.951.0214 Ph
www.studiolevel1.com

Mount Prospect

MAPLE STREET
PARKING DECK

MOUNT PROSPECT, IL

MARK	DATE	DESCRIPTION
		REVISIONS

SHEET ISSUE:	95% CONSTRUCTION DOCUMENTS
SHEET ISSUE DATE:	10/16/2019
PROJECT NO:	31-8504.00
DRAWN BY:	Author
CHECKED BY:	Checker

COPYRIGHT © 2019. ALL RIGHTS RESERVED. NO PART OF THIS DOCUMENT MAY BE REPRODUCED IN ANY FORM OR BY ANY MEANS WITHOUT PERMISSION FROM WALKER CONSULTANTS.

SHEET TITLE:
COLUMN PLAN DETAILS

S-527

10/17/2019 6:36:12 AM C:\Revit Projects\31-8504.00-MAPLE STREET PG-STRUCT_R19_jwkappel.rvt

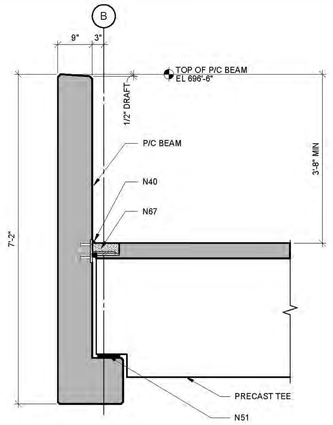

11 TEE/BEAM DETAIL

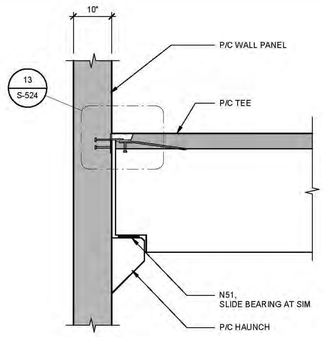

NOTES:
1. PROVIDE SLOTTED INSERT AT 4'-0" MAXIMUM.
2. PRECASTER CAN PROPOSE ALTERNATE DETAIL FOR ENGINEER REVIEW.
3. TOUCH UP WELDS WITH MINIMUM 2 COATS ZINC PRIMER.
4. SEE 4/S-521 FOR DIAPHRAGM REINFORCEMENT.

8 P/C WALL / DT SECTION

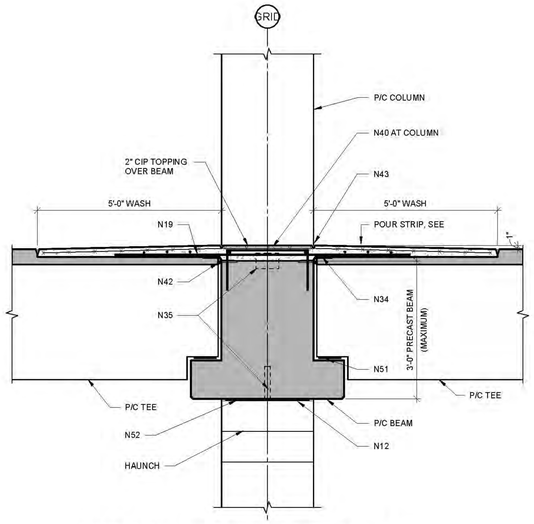

5 TEE/BEAM/COLUMN DETAIL AT PRETOPPED TEES

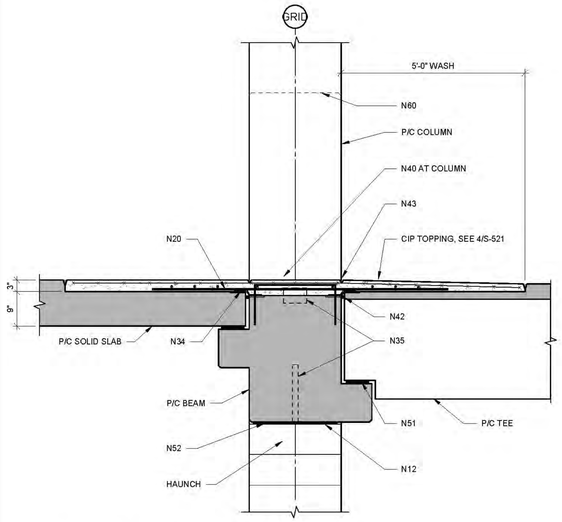

10 TEE/BEAM/SLAB DETAIL

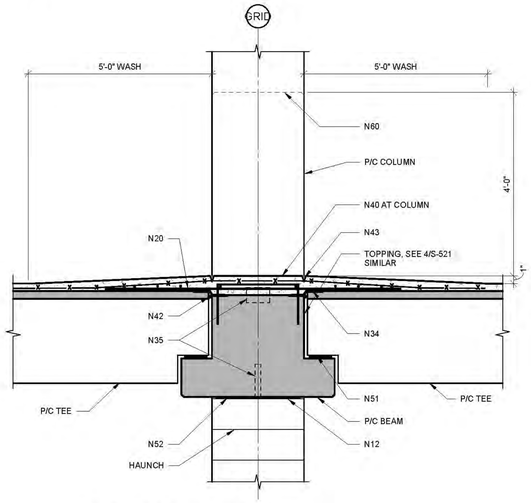

7 TEE/BEAM/COLUMN DETAIL AT TOPPED TEES

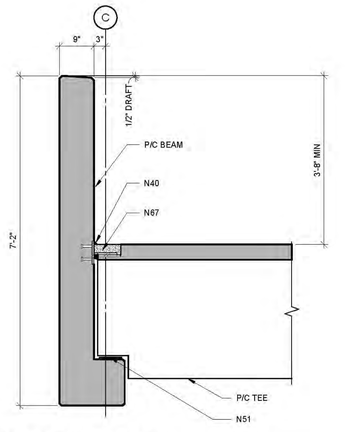

4 TEE/BEAM DETAIL

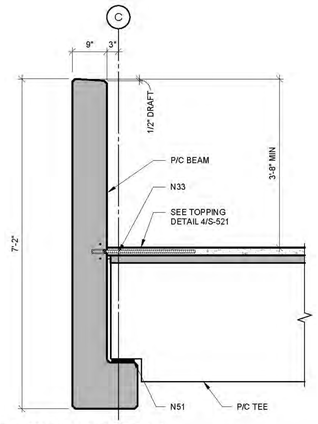

2 TEE/BEAM DETAIL

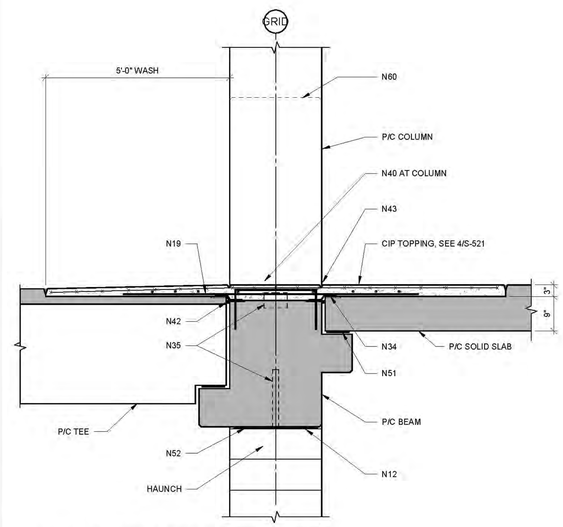

9 TEE/BEAM/SLAB DETAIL

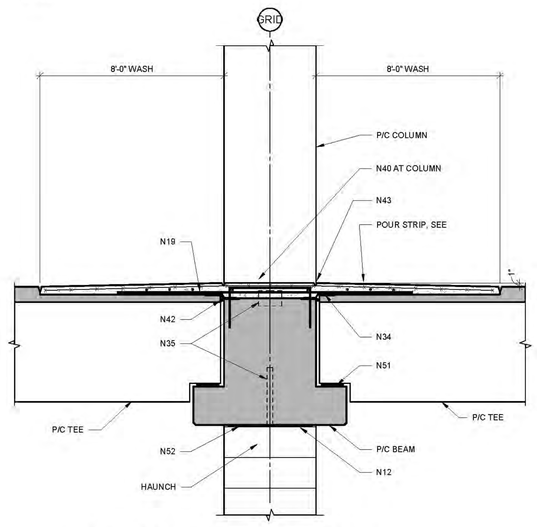

6 TEE/BEAM/COLUMN DETAIL AT PRETOPPED TEES

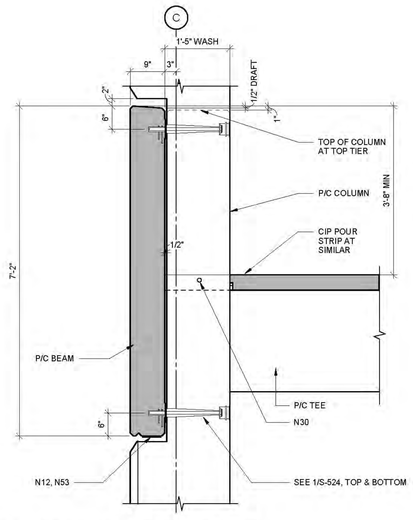

3 BEAM/COLUMN DETAIL

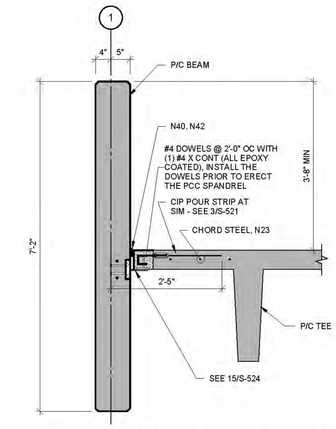

1 TEE/BEAM/COLUMN DETAIL TEE/NON LOAD BRG SPANDREL DETAIL

SHEET KEYNOTES

KEY NOTES

N12. SLOPE BEARING PLATES IN BEAMS AND SUPPORT PLATES IN COLUMNS, AS REQ'D, TO PROVIDE UNIFORM BEARING ON PADS (TYPICAL).
N20. #5 (MIN) X 7'-0" @ EACH TEE STEM (EPOXY COATED).
N21. #4 L-BAR W/ 2'-0" LEGS, SPACE TO MATCH COIL ROD SPACING (EPOXY COATED)
N22. #4 X 3'-0" W/ 180° STD HOOK @ 4'-0" OC AND 1-#4 X CONTINUOUS.
N23. 3-#5 (MIN) X CONT (EPOXY COATED)
N27. 6" X 6" W2.9 X W2.9 ADDED WWF.
N28. #5 (MIN) X 4'-6" @ EACH TEE STEM (EPOXY COATED)
N30. 3/4" DIA INSERT/COIL ROD (GALV) X 2'-6"
N31. 3/4" DIA INSERT AND COIL ROD X 2'-6" (6" FROM EDGE OF EACH POCKET) W/ #4 HAIRPIN W/ 2'-0" LEGS AROUND INSERT AND 1-#4 CONTINUOUS.
N32. 3/4" DIA INSERT/COIL ROD (GALV) X 2'-6" @ 4' OC W/ 2-#4 CONTINUOUS ADJUST INSERT ELEV FOR TEE CAMBER.
N33. 3/4" DIA INSERT/COIL ROD (GALV) X 2'-6" @ EACH TEE STEM W/ 2-#4 CONTINUOUS.
N34. ERECTION CONNECTION BY PRECASTER
N35. TORSION/STABILITY CONNECTIONS TOP & BOT EA EACH END OF BEAM BY PRECASTER. SEE DETAILS SHEET S-520 FOR EXAMPLES.
N36. CONNECTION REQUIRED TO RESIST BUMPER LOAD FORCES.
N40. COVE SEALANT. SEE DETAIL 4/S-522
N42. CONTINUOUS ETHAFOAM CONC DAM AS REQ'D.
N43. TOOLED JOINT W/ SEALANT.
N50. SORBTEX BRG PAD X 1/2", GLUE TO BEAM.
N51. RANDOM ORIENTED FIBER REINFORCED BRG. PAD X 3/8", GLUE TO TEE STEM.
N52. SORBTEX BRG PAD X 1/2", GLUE TO BEAM. AT EACH END OF BEAM. PROVIDE HOLE IN PAD FOR BOLT AT REQUIRED LOCATIONS.
N53. SORBTEX BRG PAD X 1/2", GLUE TO COLUMN POCKET.
N60. TOP OF COLUMN AT TOP TIER.
N63. USE FORM WHERE BOTTOM OF TEE FLANGE RISES ABOVE TOP OF BEAM.
N67. TOP WELD PLATE TO PRECAST EMBED PLATES. SEE DETAIL 9/S-524.
N68. BOTTOM WELD STRAP TO TEE EMBED AND P/C BEAM WITH VERTICALLY SLOTTED INSERT. SEE DETAIL 10/S-524.

PRELIMINARY - DO NOT USE FOR CONSTRUCTION

PRIME DESIGNER
WALKER CONSULTANTS
2895 Greenspoint Parkway, Suite 600
Hoffman Estates IL 60169
847.697.2640 Ph
www.walkerconsultants.com

ARCHITECTURAL
Studio Level 1
STUDIO LEVEL 1
1001 North Warren Street
Gary, IN 46403
219.951.0214 Ph
www.studiolevel1.com

MAPLE STREET
PARKING DECK

MOUNT PROSPECT, IL

MARK	DATE	DESCRIPTION
		REVISIONS
SHEET ISSUE:		95% CONSTRUCTION DOCUMENTS
SHEET ISSUE DATE:		10/16/2019
PROJECT NO:		31-8504.00
DRAWN BY:		JWK
CHECKED BY:		DJM

COPYRIGHT © 2019. ALL RIGHTS RESERVED. NO PART OF THIS DOCUMENT MAY BE REPRODUCED IN ANY FORM OR BY ANY MEANS WITHOUT PERMISSION FROM WALKER CONSULTANTS.

SHEET TITLE:
PRECAST SECTION DETAILS

S-540

10/17/2019 8:36:17 AM C:\Revit Projects\31-8504.00-MAPLE STREET PG-STRUCT_R19_jwkoppel.rvt

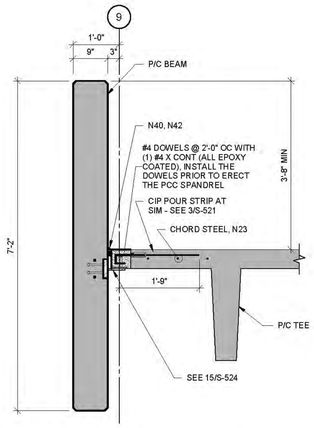

TEE/BEAM/COLUMN DETAIL TEE/NON LOAD BRG SPANDREL DETAIL

2

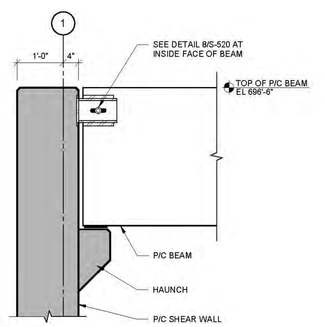

SECTION

1

PRELIMINARY - DO NOT USE FOR CONSTRUCTION

PRIME DESIGNER

WALKER CONSULTANTS

2885 Greenspoint Parkway, Suite 600
Hoffman Estates IL 60169
847.697.2640 Ph
www.walkerconsultants.com

ARCHITECTURAL

Studio Level 1

STUDIO LEVEL 1
1001 North Warren Street
Gary, IN 46403
219.951.0214 Ph
www.studiolevel1.com

Mount Prospect

MAPLE STREET
PARKING DECK

MOUNT PROSPECT, IL

MARK	DATE	DESCRIPTION
		REVISIONS

SHEET ISSUE:	95% CONSTRUCTION DOCUMENTS
SHEET ISSUE DATE:	10/16/2019
PROJECT NO:	31-8504.00
DRAWN BY:	JWK
CHECKED BY:	DJM

COPYRIGHT © 2019. ALL RIGHTS RESERVED. NO PART OF THIS DOCUMENT MAY BE REPRODUCED IN ANY FORM OR BY ANY MEANS WITHOUT PERMISSION FROM WALKER CONSULTANTS.

SHEET TITLE:
PRECAST SECTION DETAILS

S-541

10/17/2019 8:36:21 AM C:\Revit Projects\31-8504.00-MAPLE STREET PG-STRUCT_R19_jwkappel.rvt

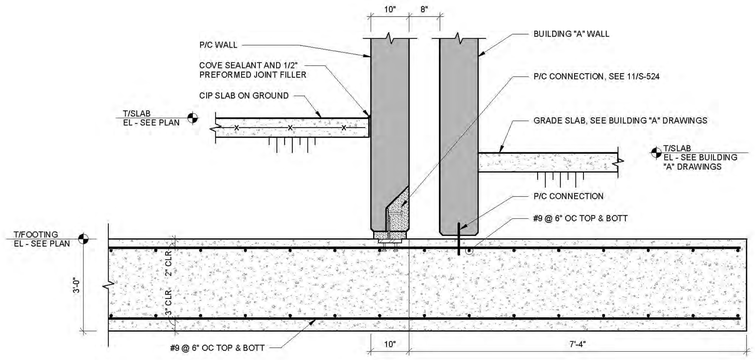

13 FOUNDATION WALL DETAIL

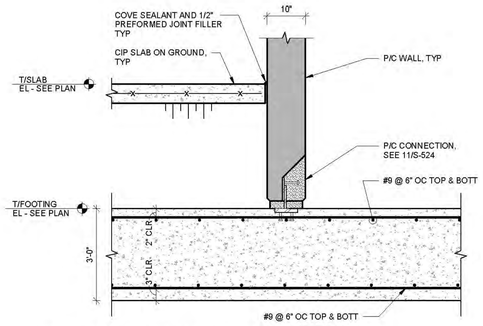

12 FOUNDATION WALL DETAIL

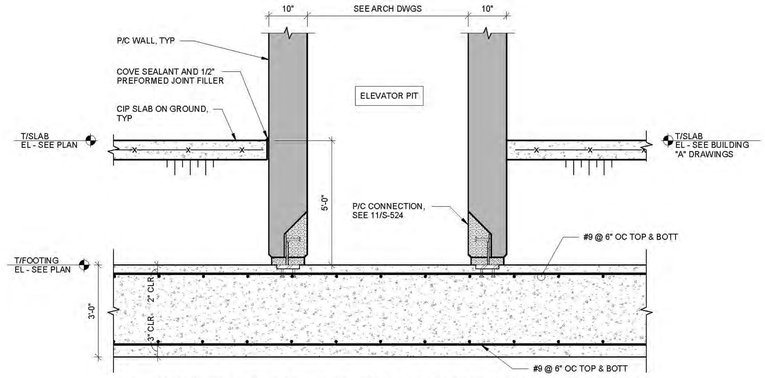

NOTE: PROVIDE PVC WATERSTOP OR OTHER APPROVED METHODS TO COMPLETELY WATERPROOF ALL JOINTS AROUND ELEVATOR PIT

11 ELEVATOR PIT WALL DETAIL

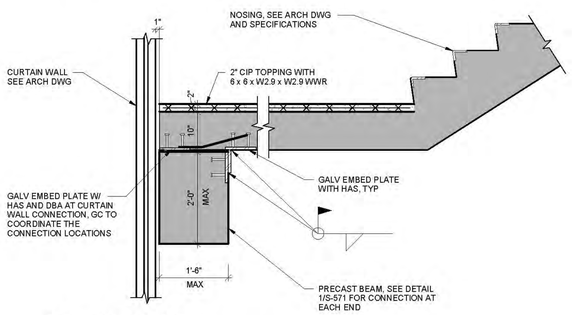

10 SECTION

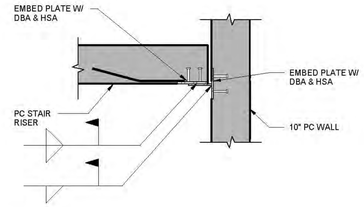

9 SECTION

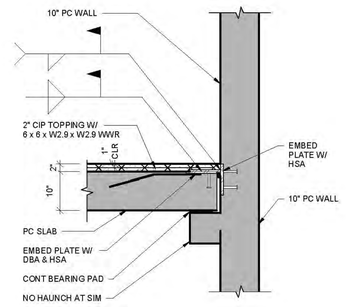

8 SECTION

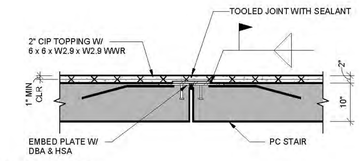

7 SECTION

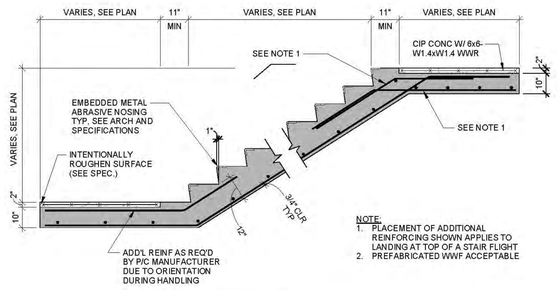

PERFORMANCE DESIGN BY PRECASTER

6 TYPICAL STAIR SECTION (P/C)

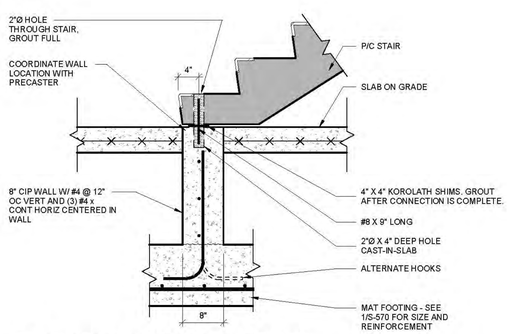

5 P/C STAIR/SLAB DETAIL

4 NOT USED

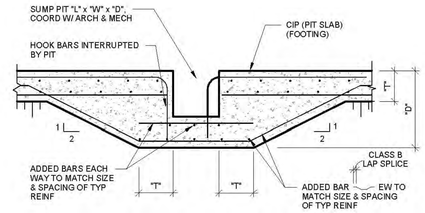

3 SUMP PIT DETAIL

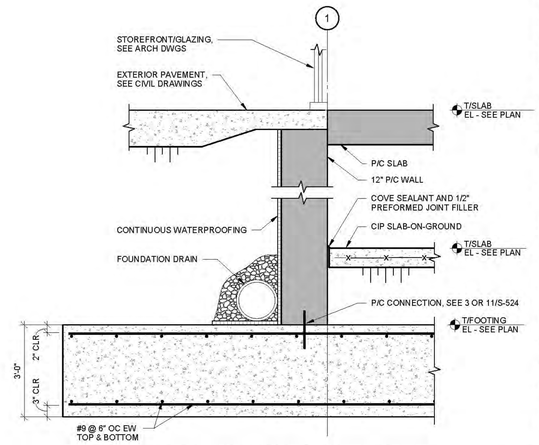

2 FOUNDATION WALL DETAIL

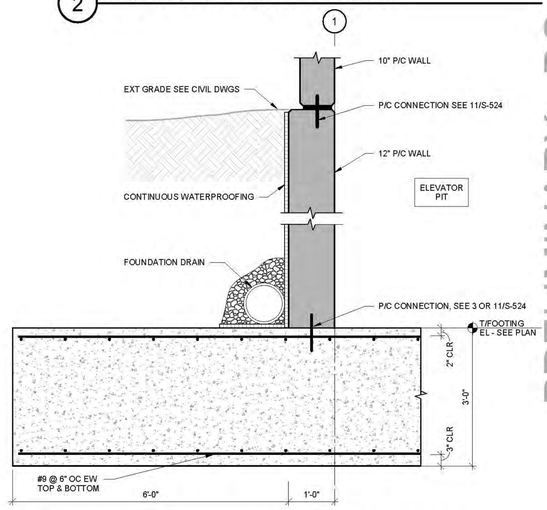

NOTES:
1. PROVIDE PVC WATERSTOP OR OTHER APPROVED METHODS TO COMPLETELY WATERPROOF ALL JOINTS AROUND ELEVATOR PIT.
2. ASSUMED ELEVATOR PIT DEPTH IS 5'-0". VERIFY DEPTH WITH ELEVATOR MANUFACTURER.

1 ELEVATOR PIT WALL DETAIL

PRELIMINARY - DO NOT USE FOR CONSTRUCTION

PRIME DESIGNER
WALKER CONSULTANTS
2895 Greenspoint Parkway, Suite 600
Hoffman Estates IL 60169
847.697.2640 Ph
www.walkerconsultants.com

ARCHITECTURAL
Studio Level 1
STUDIO LEVEL 1
1001 North Warren Street
Gary, IN 46403
219.951.0214 Ph
www.studiolevel1.com

Mount Prospect

MAPLE STREET PARKING DECK

MOUNT PROSPECT, IL

MARK	DATE	DESCRIPTION
		REVISIONS

SHEET ISSUE:	95% CONSTRUCTION DOCUMENTS
SHEET ISSUE DATE:	10/16/2019
PROJECT NO:	31-8504.00
DRAWN BY:	JW/K
CHECKED BY:	DJM

COPYRIGHT © 2019. ALL RIGHTS RESERVED. NO PART OF THIS DOCUMENT MAY BE REPRODUCED IN ANY FORM OR BY ANY MEANS WITHOUT PERMISSION FROM WALKER CONSULTANTS.

SHEET TITLE:
STAIR AND ELEVATOR DETAILS

S-570

10/17/2019 6:38:26 AM C:\Revit Projects\31-8504.00-MAPLE STREET PG-STRUCT_R19_jwkeppel.rvt

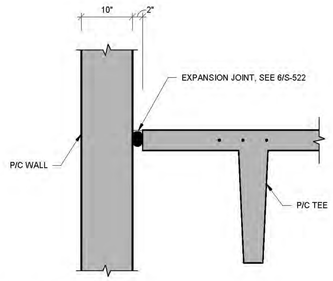

9 SECTION

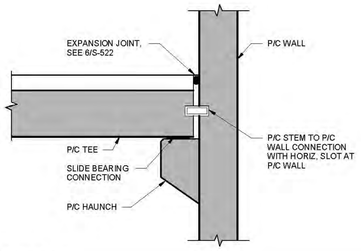

8 SECTION

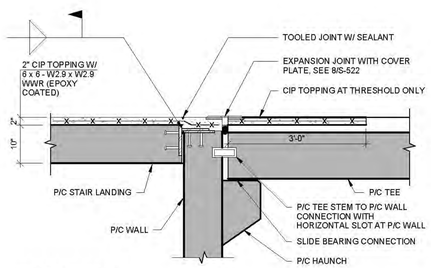

7 SECTION

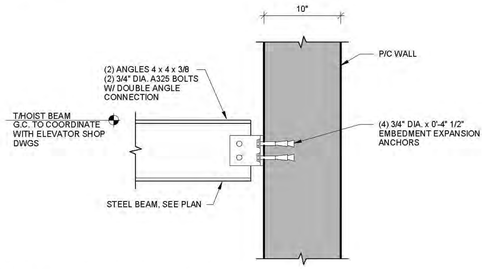

6 HOIST BEAM DETAIL

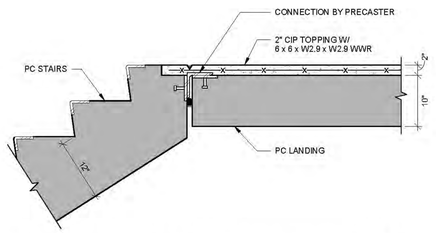

5 PRECAST STAIR CONNECTION DETAIL

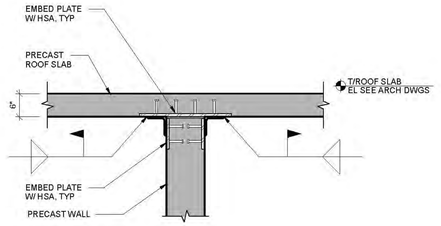

NOTES:
1. SEE ARCHITECTURAL DRAWINGS FOR ROOFING MATERIALS.

4 SECTION

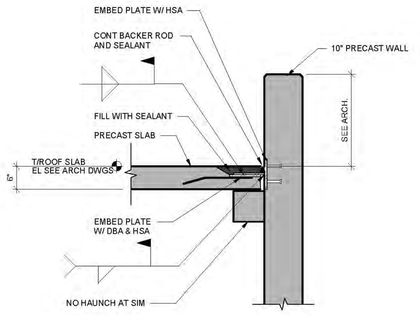

NOTES:
1. SEE ARCHITECTURAL DRAWINGS FOR ROOFING MATERIALS.

3 SECTION

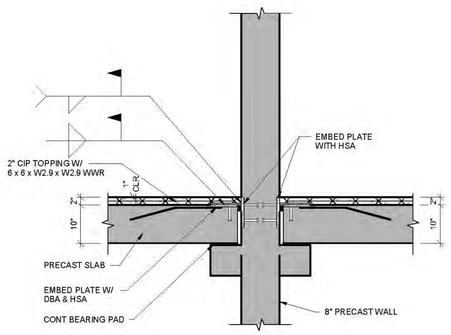

2 SECTION

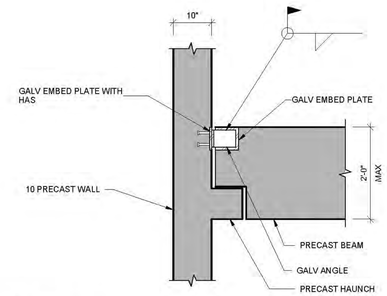

1 SECTION

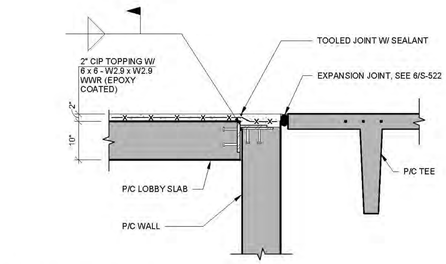

11 SECTION

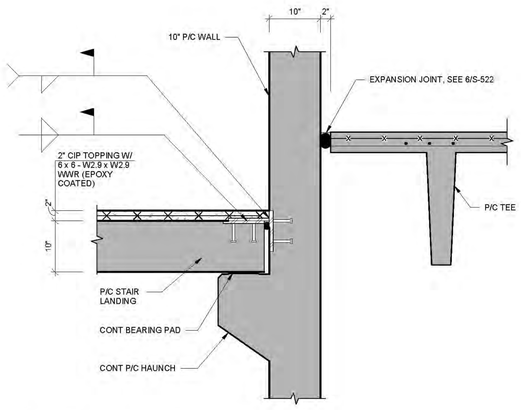

10 SECTION

PRIME DESIGNER

WALKER CONSULTANTS

2895 Greenspoint Parkway, Suite 600
Hoffman Estates IL 60169
847.697.2640 Ph
www.walkerconsultants.com

ARCHITECTURAL

Studio Level 1

STUDIO LEVEL 1
1001 North Warren Street
Gary, IN 46403
219.951.0214 Ph
www.studiolevel1.com

PRELIMINARY - DO NOT USE FOR CONSTRUCTION

Mount Prospect

MAPLE STREET PARKING DECK

MOUNT PROSPECT, IL

MARK	DATE	DESCRIPTION
		REVISIONS
SHEET ISSUE:		95% CONSTRUCTION DOCUMENTS
SHEET ISSUE DATE:		10/16/2019
PROJECT NO:		31-5504.00
DRAWN BY:		JVK
CHECKED BY:		DJM

COPYRIGHT © 2019. ALL RIGHTS RESERVED. NO PART OF THIS DOCUMENT MAY BE REPRODUCED IN ANY FORM OR BY ANY MEANS WITHOUT PERMISSION FROM WALKER CONSULTANTS.

SHEET TITLE:
STAIR AND ELEVATOR DETAILS

S-571

10/17/2019 6:36:33 AM C:\Revit Projects\31-5504.00-MAPLE STREET PROSTRUCT_R19_jvkleppot.rvt

SHEET NOTES

1. REINFORCING BARS CONFORMING TO ASTM A615 OR A706 AND NORMAL WEIGHT CONCRETE.
2. TABULATED VALUES FOR BEAMS AND COLUMNS ARE BASED ON TRANSVERSE REINFORCEMENT MEETING MINIMUM CODE REQUIREMENTS.
3. CASES 1, 2, AND 3 ARE DEFINED AS FOLLOWS:
   A. CASE 1: COVER AT LEAST 2.0d/b AND C-C SPACING AT LEAST 5.0d/b
   B. CASE 2: COVER AT LEAST 1.0d/b AND C-C SPACING AT LEAST 3.0d/b
   C. CASE 3: COVER LESS THAN 1.0d/b AND/OR C-C SPACING LESS THAN 3.0d/b BUT 2.0d/b MIN
4. LAP SPLICE LENGTHS ARE MULTIPLES OF TENSION DEVELOPMENT LENGTHS; CLASS A = 1.0 l/d AND CLASS B = 1.3 l/d
5. LAP SPLICES OF #14 AND #18 BARS ARE NOT ALLOWED. TABULATED VALUES ARE TENSION DEVELOPMENT LENGTHS.
6. TOP BARS ARE HORIZONTAL BARS WITH MORE THAN 12" OF CONCRETE CAST BELOW.
7. FOR LIGHTWEIGHT AGGREGATE CONCRETE MULTIPLY TABULATED VALUES BY 1.3.
8. WHEN LAPPING A SMALLER BAR WITH A LARGER DIAMETER BAR USE THE LAP LENGTH FOR THE SMALLER DIAMETER BAR OR TENSION DEVELOPMENT LENGTH OF LARGER BAR, WHICHEVER IS GREATER.
9. ( ) INDICATES METRIC BAR SIZE (mm).
10. EPOXY COATING OF BARS LARGER THAN #6 IS NOT ALLOWED.
11. TABULATED VALUES APPLY ONLY TO INDIVIDUAL BARS IN COLUMNS AND NOT TO BUNDLED BARS. BUNDLED BARS ARE GROUPS OF PARALLEL REINFORCING BARS, NO MORE THAN FOUR, BUNDLED IN CONTACT TO ACT AS A UNIT. LAP SPLICES ARE NOT ALLOWED FOR BUNDLED BARS AND MECHANICAL SPLICES MUST BE USED. SEE COLUMN SCHEDULE SHEET FOR ADDITIONAL REQUIREMENTS.
12. TABULATED VALUES DO NOT APPLY FOR USE IN HIGH SEISMIC SPECIAL MOMENT FRAMES AND SHEAR WALLS. SEE SPECIAL MOMENT FRAME AND / OR SHEAR WALL DETAILS FOR DEVELOPMENT LENGTH AND SPLICE REQUIREMENTS.

UNCOATED — TABLE 1 - TENSION DEVELOPMENT AND LAP SPLICE LENGTHS FOR UNCOATED BARS WITH CENTER TO CENTER SPACING NOT LESS THAN 5*d_b AND CLEAR COVER AT LEAST 2*d_b

SEE GENERAL SHEET NOTES FOR FURTHER INFORMATION — LENGTHS (IN) PER CONCRETE STRENGTH

BAR SIZE	LAP CLASS	f'_c = 4000 PSI 12"CASTING POSITION	OTHER BARS	f'_c = 5000 PSI 12"CASTING POSITION	OTHER BARS	f'_c = 6000 PSI 12"CASTING POSITION	OTHER BARS	f'_c = 7000 PSI 12"CASTING POSITION	OTHER BARS	f'_c = 8000 PSI 12"CASTING POSITION	OTHER BARS	f'_c = 9000 PSI 12"CASTING POSITION	OTHER BARS	f'_c = 10000 PSI OR GREATER 12"CASTING POSITION	OTHER BARS	MIN CLEAR COVER (IN)	MIN CENTER TO CENTER SPACING (IN)
#3	A	12	12	12	12	12	12	12	12	12	12	12	12	12	12	3/4	1 7/8
(#10)	B	16	16	16	16	16	16	16	16	16	16	16	16	16	16		
#4	A	15	12	14	12	12	12	12	12	12	12	12	12	12	12	1	2 1/2
(#13)	B	20	16	18	16	16	16	16	16	16	16	16	16	16	16		
#5	A	19	15	17	13	15	12	14	12	13	12	13	12	12	12	1 1/4	3 1/8
(#16)	B	24	19	22	17	20	16	18	16	17	16	16	16	16	16		
#6	A	22	17	20	16	18	14	17	13	16	12	15	12	14	12	1 1/2	3 3/4
(#19)	B	29	22	26	20	24	18	22	17	21	16	20	16	19	16		
#7	A	33	25	29	23	27	21	25	19	23	18	22	17	21	16	1 3/4	4 3/8
(#22)	B	43	33	38	29	35	27	32	25	30	23	28	22	27	21		
#8	A	37	29	33	26	30	24	28	22	26	20	25	19	24	18	2	5
(#25)	B	49	37	43	33	40	31	37	28	34	27	32	25	31	24		
#9	A	42	33	38	29	34	27	32	25	30	23	28	22	27	21	2 1/4	5 3/4
(#29)	B	55	42	49	38	45	34	41	32	39	30	36	28	35	27		
#10	A	47	37	42	33	39	30	36	28	34	26	32	24	30	23	2 5/8	6 3/8
(#32)	B	62	47	55	42	50	39	47	36	44	34	41	32	39	30		
#11	A	53	41	47	36	43	33	40	31	37	29	35	27	33	26	2 7/8	7 1/8
(#36)	B	68	53	61	47	56	43	52	40	48	37	46	35	43	33		
#14 (#43)	N/A	63	49	56	43	51	40	48	37	45	34	42	32	40	31	3 1/2	8 1/2
#18 (#57)	N/A	84	65	75	58	68	53	63	49	59	46	56	43	53	41	4 1/2	11 3/8

EPOXY COATED — TABLE 1 - TENSION DEVELOPMENT AND LAP SPLICE LENGTHS FOR EPOXY COATED BARS WITH CENTER TO CENTER SPACING NOT LESS THAN 5*d_b AND CLEAR COVER AT LEAST 2*d_b

SEE GENERAL SHEET NOTES FOR FURTHER INFORMATION — LENGTHS (IN) PER CONCRETE STRENGTH

BAR SIZE	LAP CLASS	f'_c = 4000 PSI 12"CASTING POSITION	OTHER BARS	f'_c = 5000 PSI 12"CASTING POSITION	OTHER BARS	f'_c = 6000 PSI 12"CASTING POSITION	OTHER BARS	f'_c = 7000 PSI 12"CASTING POSITION	OTHER BARS	f'_c = 8000 PSI 12"CASTING POSITION	OTHER BARS	f'_c = 9000 PSI 12"CASTING POSITION	OTHER BARS	f'_c = 10000 PSI OR GREATER 12"CASTING POSITION	OTHER BARS	MIN CLEAR COVER (IN)	MIN CENTER TO CENTER SPACING (IN)
#3	A	15	13	13	12	12	12	12	12	12	12	12	12	12	12	3/4	1 7/8
(#10)	B	19	17	17	16	16	16	16	16	16	16	16	16	16	16		
#4	A	20	17	18	16	16	14	15	13	14	12	13	12	13	12	1	2 1/2
(#13)	B	25	23	23	20	21	18	19	17	18	16	17	16	16	16		
#5	A	24	22	22	19	20	18	19	16	17	15	16	15	16	14	1 1/4	3 1/8
(#16)	B	32	28	28	25	26	23	24	21	23	20	21	19	20	18		
#6	A	29	26	26	23	24	21	22	20	21	18	20	17	19	17	1 1/2	3 3/4
(#19)	B	38	34	34	30	31	27	29	25	27	24	26	22	24	21		
#7	A	43	38	38	34	35	31	32	29	30	27	29	25	27	24	1 3/4	4 3/8
(#22)	B	55	49	50	44	45	40	42	37	39	35	37	33	35	31		
#8	A	49	43	44	38	40	35	37	33	35	31	33	29	31	27	2	5
(#25)	B	63	56	57	50	52	46	48	42	45	40	42	37	40	35		
#9	A	55	49	49	43	45	40	42	37	39	34	37	32	35	31	2 1/4	5 3/4
(#29)	B	71	63	64	56	58	52	54	48	51	45	48	42	45	40		
#10	A	62	55	55	49	50	45	47	41	44	38	41	36	39	35	2 5/8	6 3/8
(#32)	B	80	71	72	63	65	58	60	54	57	50	54	47	51	45		
#11	A	69	61	61	54	56	49	52	46	49	43	46	40	43	38	2 7/8	7 1/8
(#36)	B	89	79	80	70	73	64	67	59	63	55	59	52	56	50		
#14 (#43)	N/A	82	73	74	65	67	59	62	55	58	51	55	48	52	46	3 1/2	8 1/2
#18 (#57)	N/A	110	97	98	86	89	79	83	73	78	68	73	64	69	61	4 1/2	11 3/8

UNCOATED — TABLE 2 - TENSION DEVELOPMENT AND LAP SPLICED LENGTHS FOR UNCOATED BARS (SEE QUALIFYING CASES BELOW)

SEE GENERAL SHEET NOTES FOR FURTHER INFORMATION — LENGTHS (IN) PER CONCRETE STRENGTH

BAR SIZE	LAP CLASS	4000 PSI 12" CASTING POSITION CASE 1	CASE 2	4000 OTHER BARS CASE 1	CASE 2	5000 PSI 12" CASTING POSITION CASE 1	CASE 2	5000 OTHER BARS CASE 1	CASE 2	6000 PSI 12" CASTING POSITION CASE 1	CASE 2	6000 OTHER BARS CASE 1	CASE 2	7000 PSI 12" CASTING POSITION CASE 1	CASE 2	7000 OTHER BARS CASE 1	CASE 2	8000 PSI 12" CASTING POSITION CASE 1	CASE 2	8000 OTHER BARS CASE 1	CASE 2	9000 PSI 12" CASTING POSITION CASE 1	CASE 2	9000 OTHER BARS CASE 1	CASE 2	10000 PSI OR GREATER 12" CASTING POSITION CASE 1	CASE 2	10000 OTHER BARS CASE 1	CASE 2
#3	A	19	28	15	22	17	25	13	19	15	23	12	18	14	21	12	16	13	20	12	15	13	19	12	15	12	18	12	14
(#10)	B	24	36	19	28	22	33	17	25	20	30	16	23	18	28	16	21	17	26	16	20	16	24	16	19	16	23	16	18
#4	A	25	37	19	29	22	33	17	26	20	31	16	24	19	28	15	22	18	26	14	20	17	25	13	19	16	24	12	18
(#13)	B	32	48	25	37	29	43	22	33	26	40	20	31	25	37	19	28	23	34	18	26	22	32	17	25	21	31	16	24
#5	A	31	47	24	36	28	42	22	32	25	38	20	29	24	35	18	27	22	33	17	25	21	31	16	24	20	30	15	23
(#16)	B	40	60	31	47	36	54	28	42	33	49	25	38	31	46	24	35	29	43	22	33	27	40	21	31	26	38	20	30
#6	A	37	56	29	43	33	50	26	38	31	46	24	35	28	42	22	33	26	40	20	30	25	37	19	29	24	36	18	27
(#19)	B	48	72	37	56	43	65	33	50	40	59	31	46	37	55	28	42	34	51	26	40	32	48	25	37	31	46	24	35
#7	A	54	81	42	63	49	73	37	56	44	66	34	51	41	62	32	47	38	58	30	44	36	54	28	42	35	52	27	40
(#22)	B	70	106	54	81	63	94	49	73	58	86	44	66	53	80	41	62	50	75	38	58	47	70	36	54	45	67	34	52
#8	A	62	93	48	71	55	83	43	64	51	76	39	58	47	70	36	54	44	66	34	51	41	62	32	48	39	59	30	45
(#25)	B	80	121	62	93	72	108	55	83	66	98	51	76	61	91	47	70	57	85	44	66	54	80	41	62	51	76	39	59
#9	A	70	105	54	81	63	94	48	72	57	86	44	66	53	79	41	61	49	74	38	57	47	70	36	54	44	66	34	51
(#29)	B	91	136	70	105	81	122	63	94	74	111	57	86	69	103	53	79	64	96	49	74	61	91	47	70	57	86	44	66
#10	A	79	118	61	91	70	105	54	81	64	96	49	74	59	89	46	69	56	83	43	64	53	79	41	61	50	75	39	58
(#32)	B	102	153	79	118	91	137	70	105	83	125	64	96	77	116	59	89	72	108	56	83	68	102	53	79	65	97	50	75
#11	A	87	131	67	101	78	117	60	90	71	107	55	82	66	99	51	76	62	93	48	71	58	87	45	67	55	83	43	64
(#36)	B	113	170	87	131	101	152	78	117	93	139	71	107	86	128	66	99	80	120	62	93	76	113	58	87	72	108	55	83
#14 (#43)	N/A	105	157	81	121	94	140	72	108	86	128	66	99	79	119	61	91	74	111	57	85	70	105	54	81	66	99	51	77
#18 (#57)	N/A	139	209	107	161	125	187	96	144	114	171	88	131	106	158	81	122	99	148	76	114	93	139	72	107	88	132	68	102

TABLE 2 QUALIFIERS				
	CASE 1	CENTER TO CENTER SPACING OF BARS BEING DEVELOPED OR LAP SPLICED NOT LESS THAN 2*d_b, CLEAR COVER AT LEAST d_b AND OCCURS WITHIN THE STIRRUPS OR TIES OF A BEAM OR COLUMN.	OR	CENTER TO CENTER SPACING OF BARS OF BEING DEVELOPED OR LAP SPLICED AT LEAST 3* d_b AND CLEAR COVER AT LEAST d_b
	CASE 2	CENTER TO CENTER SPACING OF BARS BEING DEVELOPED OR LAP SPLICED NOT LESS THAN 2*d_b, AND NO LESS THAN MINIMUM CLEAR SPACING SPECIFIED IN GENERAL SHEET NOTES.	AND	CLEAR COVER NOT LESS THAN 0.5*d_b AND NO LESS THAN CLEAR COVER SPECIFIED IN GENERAL STRUCTURAL NOTES.

EPOXY COATED — TABLE 2 - TENSION DEVELOPMENT AND LAP SPLICED LENGTHS FOR EPOXY COATED BARS (SEE QUALIFYING CASES BELOW)

SEE GENERAL SHEET NOTES FOR FURTHER INFORMATION — LENGTHS (IN) PER CONCRETE STRENGTH

BAR SIZE	LAP CLASS	4000 PSI 12" CASTING POSITION CASE 1	CASE 2	4000 OTHER BARS CASE 1	CASE 2	5000 PSI 12" CASTING POSITION CASE 1	CASE 2	5000 OTHER BARS CASE 1	CASE 2	6000 PSI 12" CASTING POSITION CASE 1	CASE 2	6000 OTHER BARS CASE 1	CASE 2	7000 PSI 12" CASTING POSITION CASE 1	CASE 2	7000 OTHER BARS CASE 1	CASE 2	8000 PSI 12" CASTING POSITION CASE 1	CASE 2	8000 OTHER BARS CASE 1	CASE 2	9000 PSI 12" CASTING POSITION CASE 1	CASE 2	9000 OTHER BARS CASE 1	CASE 2	10000 PSI OR GREATER 12" CASTING POSITION CASE 1	CASE 2	10000 OTHER BARS CASE 1	CASE 2
#3	A	24	37	22	32	22	33	19	29	20	30	18	26	19	28	16	25	17	26	15	23	16	24	15	22	16	23	14	21
(#10)	B	32	47	28	42	28	42	25	38	26	39	23	34	24	36	21	32	23	34	20	30	21	32	19	28	20	30	18	27
#4	A	33	49	29	43	29	44	26	39	27	40	24	35	25	37	22	33	23	35	20	30	22	33	19	29	21	31	18	27
(#13)	B	42	63	37	56	38	57	33	50	35	52	30	46	32	48	28	42	30	45	26	39	28	42	25	37	27	40	24	36
#5	A	41	61	36	54	36	54	32	48	33	50	29	44	31	46	27	41	29	43	26	38	27	41	24	36	26	39	23	34
(#16)	B	53	79	47	70	47	71	42	62	43	64	38	57	40	60	35	53	37	56	33	49	35	53	31	47	33	50	30	44
#6	A	49	73	43	64	44	65	38	58	40	60	35	53	37	55	33	49	35	52	31	46	33	49	29	43	31	46	27	41
(#19)	B	63	95	56	84	57	85	50	75	52	77	46	68	48	72	42	63	45	67	39	59	42	63	37	56	40	60	36	53
#7	A	71	106	63	94	63	95	56	84	58	87	51	77	54	80	47	71	50	75	44	66	47	71	42	62	45	67	40	59
(#22)	B	92	138	81	122	82	123	73	109	75	113	66	99	70	104	61	92	65	98	57	86	61	92	54	81	58	87	52	77
#8	A	81	121	72	107	72	108	64	96	66	99	58	87	61	92	54	81	57	86	51	76	54	81	48	71	51	77	45	68
(#25)	B	105	158	93	139	94	141	83	124	86	129	76	114	80	119	70	105	74	111	66	99	70	105	62	93	67	100	59	88
#9	A	91	137	81	121	82	122	72	108	75	112	66	99	69	103	61	91	65	97	57	85	61	91	54	80	58	87	51	76
(#29)	B	119	178	105	157	106	159	94	140	97	145	85	128	90	134	79	119	84	126	74	111	79	119	70	105	75	112	66	99
#10	A	103	154	91	136	92	138	81	122	84	126	74	111	78	116	69	103	73	109	64	96	69	103	60	91	65	97	57	86
(#32)	B	133	200	118	177	119	179	106	158	109	163	96	144	101	151	89	134	94	142	83	125	89	133	79	118	85	127	75	112
#11	A	114	171	101	151	102	153	90	135	93	140	82	123	86	129	76	114	81	121	71	107	76	114	67	101	72	108	64	96
(#36)	B	148	222	131	196	132	199	117	175	121	181	107	160	112	168	99	148	105	157	93	139	99	148	87	131	94	141	83	124
#14 (#43)	N/A	137	205	121	181	122	183	108	162	112	168	99	148	104	155	91	137	97	145	85	128	91	137	81	121	87	130	77	115
#18 (#57)	N/A	182	273	161	241	163	244	144	216	149	223	131	197	138	207	122	182	129	193	114	171	122	182	107	161	115	173	102	153

TABLE 2 QUALIFIERS				
	CASE 1	CENTER TO CENTER SPACING OF BARS BEING DEVELOPED OR LAP SPLICED NOT LESS THAN 2*d_b, CLEAR COVER AT LEAST d_b AND OCCURS WITHIN THE STIRRUPS OR TIES OF A BEAM OR COLUMN.	OR	CENTER TO CENTER SPACING OF BARS OF BEING DEVELOPED OR LAP SPLICED AT LEAST 3* d_b AND CLEAR COVER AT LEAST d_b
	CASE 2	CENTER TO CENTER SPACING OF BARS BEING DEVELOPED OR LAP SPLICED NOT LESS THAN 2*d_b, AND NO LESS THAN MINIMUM CLEAR SPACING SPECIFIED IN GENERAL SHEET NOTES.	AND	CLEAR COVER NOT LESS THAN 0.5*d_b AND NO LESS THAN CLEAR COVER SPECIFIED IN GENERAL STRUCTURAL NOTES.

f'_c = 4000 PSI — TABLE 3 (f'_c = 4000 PSI) - TENSION DEVELOPMENT AND LAP SPLICE LENGTHS FOR BARS IN WALLS AND SLABS (IN)

SEE GENERAL SHEET NOTES FOR FURTHER INFORMATION

BAR SIZE	LAP CLASS	MIN. CONCRETE COVER = 0.75" UNCOATED 12" CASTING POSITION	UNCOATED OTHER BARS	EPOXY COATED 12" CASTING POSITION	EPOXY COATED OTHER BARS	MINIMUM CENTER TO CENTER SPACING	MIN. CONCRETE COVER = 1.00" UNCOATED 12" CASTING POSITION	UNCOATED OTHER BARS	EPOXY COATED 12" CASTING POSITION	EPOXY COATED OTHER BARS	MINIMUM CENTER TO CENTER SPACING	MIN. CONCRETE COVER = 1.50" UNCOATED 12" CASTING POSITION	UNCOATED OTHER BARS	EPOXY COATED 12" CASTING POSITION	EPOXY COATED OTHER BARS	MINIMUM CENTER TO CENTER SPACING	MIN. CONCRETE COVER = 2.00" UNCOATED 12" CASTING POSITION	UNCOATED OTHER BARS	EPOXY COATED 12" CASTING POSITION	EPOXY COATED OTHER BARS	MINIMUM CENTER TO CENTER SPACING
#3	A	12	12	15	13	1 7/8	12	12	15	13	1 7/8	12	12	14	12	1 7/8 UNC	12	12	14	12	1 7/8 UNC
(#10)	B	16	16	19	17		16	16	19	17		16	16	18	16	2 5/8 EPOXY	16	16	18	16	2 5/8 EPOXY
#4	A	19	15	24	22	2	15	12	20	17	2 1/2	15	12	18	14	2 1/2 UNC	15	12	18	14	2 1/2 UNC
(#13)	B	24	19	32	28		20	16	25	22		20	16	23	18	3 1/2 EPOXY	20	16	23	18	3 1/2 EPOXY
#5	A	28	21	36	32	2 1/8	22	17	29	26	2 5/8	19	15	24	22	3 1/8	19	15	22	17	3 1/8 UNC
(#16)	B	36	28	47	41		29	22	38	33		24	19	32	28		24	19	29	22	4 3/8 EPOXY
#6	A	37	29	49	43	2 1/4	31	24	40	35	2 3/4	22	17	29	26	3 3/4	22	17	29	26	3 3/4
(#19)	B	48	37	63	56		40	31	52	46		29	22	38	34		29	22	38	34	
#7	A	60	46	78	69	2 3/8	50	38	65	57	2 7/8	37	28	48	43	3 7/8	33	25	43	38	4 3/8
(#22)	B	78	60	102	90		64	50	84	74		48	37	62	55		42	33	55	49	
#8	A	74	57	97	86	2 1/2	62	48	81	72	3	47	36	61	54	4	37	29	49	43	5
(#25)	B	96	74	126	111		80	62	105	93		60	47	79	70		48	37	63	56	
#9	A	90	69	117	104	2 5/8	76	58	99	87	3 1/8	57	44	75	66	4 1/8	46	36	60	53	5 1/8
(#29)	B	117	90	153	135		98	76	128	113		74	57	97	86		60	46	78	69	
#10	A	108	83	141	125	2 7/8	92	70	120	106	3 3/8	70	54	92	81	4 1/4	57	44	74	66	5 1/4
(#32)	B	140	108	183	162		119	92	155	137		91	70	119	105		74	57	97	85	
#11	A	127	98	166	146	3	108	83	141	125	3 1/2	84	65	110	97	4 1/2	67	53	89	79	5 1/2
(#36)	B	165	127	215	190		141	108	184	162		109	84	142	125		89	68	116	102	

f'_c = 5000 PSI — TABLE 3 (f'_c = 5000 PSI) - TENSION DEVELOPMENT AND LAP SPLICE LENGTHS FOR BARS IN WALLS AND SLABS (IN)

SEE GENERAL SHEET NOTES FOR FURTHER INFORMATION

BAR SIZE	LAP CLASS	MIN. CONCRETE COVER = 0.75" UNCOATED 12" CASTING POSITION	UNCOATED OTHER BARS	EPOXY COATED 12" CASTING POSITION	EPOXY COATED OTHER BARS	MINIMUM CENTER TO CENTER SPACING	MIN. CONCRETE COVER = 1.00" UNCOATED 12" CASTING POSITION	UNCOATED OTHER BARS	EPOXY COATED 12" CASTING POSITION	EPOXY COATED OTHER BARS	MINIMUM CENTER TO CENTER SPACING	MIN. CONCRETE COVER = 1.50" UNCOATED 12" CASTING POSITION	UNCOATED OTHER BARS	EPOXY COATED 12" CASTING POSITION	EPOXY COATED OTHER BARS	MINIMUM CENTER TO CENTER SPACING	MIN. CONCRETE COVER = 2.00" UNCOATED 12" CASTING POSITION	UNCOATED OTHER BARS	EPOXY COATED 12" CASTING POSITION	EPOXY COATED OTHER BARS	MINIMUM CENTER TO CENTER SPACING
#3	A	12	12	13	12	1 7/8	12	12	13	12	1 7/8	12	12	12	12	1 7/8 UNC	12	12	12	12	1 7/8 UNC
(#10)	B	16	16	17	16		16	16	17	16		16	16	16	16	2 5/8 EPOXY	16	16	16	16	2 5/8 EPOXY
#4	A	17	13	22	20	2	14	12	18	16	2.5	14	12	16	13	2 1/2 UNC	14	12	16	13	2 1/2 UNC
(#13)	B	22	17	29	25		18	16	23	20		18	16	21	16	3 1/2 EPOXY	18	16	21	16	3 1/2 EPOXY
#5	A	25	19	32	28	2 1/8	20	16	26	23	2 5/8	17	13	22	19	3 1/8	17	13	20	16	3 1/8 UNC
(#16)	B	32	25	42	37		26	20	34	30		22	17	29	25		22	17	26	20	4 3/8 EPOXY
#6	A	33	26	44	39	2 1/4	27	21	36	32	2 3/4	20	16	26	23	3 3/4	20	16	26	23	3 3/4
(#19)	B	43	33	57	50		36	27	46	41		26	20	34	30		26	20	34	30	
#7	A	54	41	70	62	2 3/8	44	34	58	51	2 7/8	33	26	43	38	3 7/8	29	23	38	34	4 3/8
(#22)	B	70	54	91	80		58	44	75	67		43	33	56	49		38	29	50	44	
#8	A	66	51	87	77	2 1/2	56	43	72	64	3	42	32	54	48	4	33	26	44	38	5
(#25)	B	86	67	113	100		72	56	94	83		54	42	71	62		43	33	57	50	
#9	A	80	62	105	93	2 5/8	68	52	88	78	3 1/8	51	40	67	59	4 1/8	41	32	54	48	5 1/8
(#29)	B	105	81	136	120		88	68	114	101		67	51	87	77		54	41	70	62	
#10	A	97	75	126	111	2 7/8	82	63	107	95	3 3/8	63	48	82	72	4 1/4	51	39	67	59	5 1/4
(#32)	B	126	97	164	145		106	82	139	123		82	63	107	94		66	51	86	76	
#11	A	113	87	148	131	3	97	75	126	112	3 1/2	75	58	98	86	4 1/2	61	47	80	71	5 1/2
(#36)	B	147	113	192	170		126	97	164	145		97	75	127	112		79	61	104	91	

f'_c = 6000 PSI — TABLE 3 (f'c = 6000 PSI) - TENSION DEVELOPMENT AND LAP SPLICE LENGTHS FOR BARS IN WALLS AND SLABS (IN)

SEE GENERAL SHEET NOTES FOR FURTHER INFORMATION

BAR SIZE	LAP CLASS	MIN. CONCRETE COVER = 0.75" UNCOATED 12" CASTING POSITION	UNCOATED OTHER BARS	EPOXY COATED 12" CASTING POSITION	EPOXY COATED OTHER BARS	MINIMUM CENTER TO CENTER SPACING	MIN. CONCRETE COVER = 1.00" UNCOATED 12" CASTING POSITION	UNCOATED OTHER BARS	EPOXY COATED 12" CASTING POSITION	EPOXY COATED OTHER BARS	MINIMUM CENTER TO CENTER SPACING	MIN. CONCRETE COVER = 1.50" UNCOATED 12" CASTING POSITION	UNCOATED OTHER BARS	EPOXY COATED 12" CASTING POSITION	EPOXY COATED OTHER BARS	MINIMUM CENTER TO CENTER SPACING	MIN. CONCRETE COVER = 2.00" UNCOATED 12" CASTING POSITION	UNCOATED OTHER BARS	EPOXY COATED 12" CASTING POSITION	EPOXY COATED OTHER BARS	MINIMUM CENTER TO CENTER SPACING
#3	A	12	12	12	12	1 7/8	12	12	12	12	1 7/8	12	12	12	12	1 7/8 UNC	12	12	12	12	1 7/8 UNC
(#10)	B	16	16	16	16		16	16	16	16		16	16	16	16	2 5/8 EPOXY	16	16	16	16	2 5/8 EPOXY
#4	A	16	12	20	18	2	12	12	16	14	2.5	12	12	15	12	2 1/2 UNC	12	12	15	12	2 1/2 UNC
(#13)	B	20	16	26	23		16	16	21	18		16	16	19	16	3 1/2 EPOXY	16	16	19	16	3 1/2 EPOXY
#5	A	23	17	29	26	2 1/8	18	14	24	21	2 5/8	16	12	20	18	3 1/8	16	12	18	14	3 1/8 UNC
(#16)	B	29	23	38	34		24	18	31	27		20	16	26	23		20	16	24	18	4 3/8 EPOXY
#6	A	31	24	40	35	2 1/4	25	19	33	29	2 3/4	18	14	24	21	3 3/4	18	14	24	21	3 3/4
(#19)	B	40	31	52	46		33	25	42	37		24	18	31	28		24	18	31	28	
#7	A	49	38	64	56	2 3/8	41	31	53	47	2 7/8	30	23	39	35	3 7/8	27	21	35	31	4 3/8
(#22)	B	64	49	83	73		53	41	69	61		39	30	51	45		35	27	45	40	
#8	A	61	47	79	70	2 1/2	51	39	66	58	3	38	29	50	44	4	31	24	40	35	5
(#25)	B	79	61	103	91		66	51	86	76		49	38	64	57		40	31	52	46	
#9	A	74	57	96	85	2 5/8	62	48	81	71	3 1/8	47	36	61	54	4 1/8	38	29	49	44	5 1/8
(#29)	B	95	74	125	110		80	62	105	92		61	47	79	70		49	38	64	57	
#10	A	88	68	115	102	2 7/8	75	58	98	86	3 3/8	57	44	75	66	4 1/4	47	36	61	54	5 1/4
(#32)	B	115	88	150	132		97	75	127	112		75	57	97	86		60	47	79	70	
#11	A	104	80	135	119	3	88	68	115	102	3 1/2	68	53	89	79	4 1/2	56	43	73	64	5 1/2
(#36)	B	135	104	176	155		115	88	150	132		89	68	116	102		73	56	95	84	

f'_c = 7000 PSI — TABLE 3 (f'c = 7000 PSI) - TENSION DEVELOPMENT AND LAP SPLICE LENGTHS FOR BARS IN WALLS AND SLABS (IN)

SEE GENERAL SHEET NOTES FOR FURTHER INFORMATION

BAR SIZE	LAP CLASS	MIN. CONCRETE COVER = 0.75" UNCOATED 12" CASTING POSITION	UNCOATED OTHER BARS	EPOXY COATED 12" CASTING POSITION	EPOXY COATED OTHER BARS	MINIMUM CENTER TO CENTER SPACING	MIN. CONCRETE COVER = 1.00" UNCOATED 12" CASTING POSITION	UNCOATED OTHER BARS	EPOXY COATED 12" CASTING POSITION	EPOXY COATED OTHER BARS	MINIMUM CENTER TO CENTER SPACING	MIN. CONCRETE COVER = 1.50" UNCOATED 12" CASTING POSITION	UNCOATED OTHER BARS	EPOXY COATED 12" CASTING POSITION	EPOXY COATED OTHER BARS	MINIMUM CENTER TO CENTER SPACING	MIN. CONCRETE COVER = 2.00" UNCOATED 12" CASTING POSITION	UNCOATED OTHER BARS	EPOXY COATED 12" CASTING POSITION	EPOXY COATED OTHER BARS	MINIMUM CENTER TO CENTER SPACING
#3	A	12	12	12	12	1 7/8	12	12	12	12	1 7/8	12	12	12	12	1 7/8 UNC	12	12	12	12	1 7/8 UNC
(#10)	B	16	16	16	16		16	16	16	16		16	16	16	16	2 5/8 EPOXY	16	16	16	16	2 5/8 EPOXY
#4	A	14	12	19	17	2	12	12	15	13	2.5	12	12	14	12	2 1/2 UNC	12	12	14	12	2 1/2 UNC
(#13)	B	19	16	24	21		16	16	19	17		16	16	18	16	3 1/2 EPOXY	16	16	18	16	3 1/2 EPOXY
#5	A	21	16	27	24	2 1/8	17	13	22	20	2 5/8	14	12	19	17	3 1/8	14	12	17	13	3 1/8 UNC
(#16)	B	27	21	35	31		22	17	29	25		19	16	24	21		19	16	22	17	4 3/8 EPOXY
#6	A	28	22	37	33	2 1/4	23	18	30	27	2 3/4	17	13	22	20	3 3/4	17	13	22	20	3 3/4
(#19)	B	37	28	48	42		30	23	39	35		22	17	29	26		22	17	29	26	
#7	A	45	35	59	52	2 3/8	38	29	49	43	2 7/8	28	22	36	32	3 7/8	25	19	32	29	4 3/8
(#22)	B	59	45	77	68		49	38	64	56		36	28	47	42		32	25	42	37	
#8	A	56	43	74	65	2 1/2	47	36	61	54	3	35	27	46	41	4	28	22	37	33	5
(#25)	B	73	56	95	84		61	47	80	70		46	35	60	53		37	28	48	42	
#9	A	68	52	89	78	2 5/8	57	44	75	66	3 1/8	44	34	57	50	4 1/8	35	27	46	40	5 1/8
(#29)	B	88	68	116	102		74	57	97	86		56	44	74	65		46	35	59	52	
#10	A	82	63	107	94	2 7/8	69	53	91	80	3 3/8	53	41	69	61	4 1/4	43	33	56	50	5 1/4
(#32)	B	106	82	139	122		90	69	118	104		69	53	90	80		56	43	73	65	
#11	A	96	74	125	111	3	82	63	107	94	3 1/2	63	49	83	73	4 1/2	52	40	68	60	5 1/2
(#36)	B	125	96	163	144		106	82	139	123		82	63	107	95		67	52	87	77	

PRELIMINARY - DO NOT USE FOR CONSTRUCTION

PRIME DESIGNER
WALKER CONSULTANTS
2895 Greenspoint Parkway, Suite 600
Hoffman Estates IL 60169
847.697.2640 Ph
www.walkerconsultants.com

ARCHITECTURAL
Studio Level 1
STUDIO LEVEL 1
1001 North Warren Street
Gary, IN 46403
219.951.0214 Ph
www.studiolevel1.com

Mount Prospect

MAPLE STREET PARKING DECK

MOUNT PROSPECT, IL

MARK	DATE	DESCRIPTION
REVISIONS		

SHEET ISSUE:	95% CONSTRUCTION DOCUMENTS
SHEET ISSUE DATE:	10/16/2019
PROJECT NO:	31-8504.00
DRAWN BY:	JWK
CHECKED BY:	DJM

COPYRIGHT © 2019. ALL RIGHTS RESERVED. NO PART OF THIS DOCUMENT MAY BE REPRODUCED IN ANY FORM OR BY ANY MEANS WITHOUT PERMISSION FROM WALKER CONSULTANTS.

SHEET TITLE:
LAP SPLICE SCHEDULES

S-650

10/17/2019 6:36:38 AM C:\Revit Projects\31-8504.00-MAPLE STREET PG-STRUCT_R19_jwkappel.rvt

SHEET NOTES

1. REINFORCING BARS CONFORMING TO ASTM A615 OR A706 AND NORMAL WEIGHT CONCRETE.
2. TABULATED VALUES FOR BEAMS AND COLUMNS ARE BASED ON TRANSVERSE REINFORCEMENT MEETING MINIMUM CODE REQUIREMENTS.
3. CASES 1, 2, AND 3 ARE DEFINED AS FOLLOWS:
   A. CASE 1: COVER AT LEAST 2.0db AND C-C SPACING AT LEAST 5.0db
   B. CASE 2: COVER AT LEAST 1.0db AND C-C SPACING AT LEAST 3.0db
   C. CASE 3: COVER LESS THAN 1.0db AND/OR C-C SPACING LESS THAN 3.0db BUT 2.0db MIN
4. LAP SPLICE LENGTHS ARE MULTIPLES OF TENSION DEVELOPMENT LENGTHS; CLASS A = 1.0 ld AND CLASS B = 1.3 ld
5. LAP SPLICES OF #14 AND #18 BARS ARE NOT ALLOWED. TABULATED VALUES ARE TENSION DEVELOPMENT LENGTHS.
6. TOP BARS ARE HORIZONTAL BARS WITH MORE THAN 12" OF CONCRETE CAST BELOW.
7. FOR LIGHTWEIGHT AGGREGATE CONCRETE MULTIPLY TABULATED VALUES BY 1.3.
8. WHEN LAPPING A SMALLER BAR WITH A LARGER DIAMETER BAR USE THE LAP LENGTH FOR THE SMALLER DIAMETER BAR OR TENSION DEVELOPMENT LENGTH OF LARGER BAR, WHICHEVER IS GREATER.
9. ( ) INDICATES METRIC BAR SIZE (mm).
10. EPOXY COATING OF BARS LARGER THAN #6 IS NOT ALLOWED.
11. TABULATED VALUES APPLY ONLY TO INDIVIDUAL BARS IN COLUMNS AND NOT TO BUNDLED BARS. BUNDLED BARS ARE GROUPS OF PARALLEL REINFORCING BARS, NO MORE THAN FOUR, BUNDLED IN CONTACT TO ACT AS A UNIT. LAP SPLICES ARE NOT ALLOWED FOR BUNDLED BARS AND MECHANICAL SPLICES MUST BE USED. SEE COLUMN SCHEDULE SHEET FOR ADDITIONAL REQUIREMENTS.
12. TABULATED VALUES DO NOT APPLY FOR USE IN HIGH SEISMIC SPECIAL MOMENT FRAMES AND SHEAR WALLS. SEE SPECIAL MOMENT FRAME AND / OR SHEAR WALL DETAILS FOR DEVELOPMENT LENGTH AND SPLICE REQUIREMENTS.

f'c = 8000 PSI — TABLE 3 (f'c = 8000 PSI) - TENSION DEVELOPMENT AND LAP SPLICE LENGTHS FOR BARS IN WALLS AND SLABS (IN)

SEE GENERAL SHEET NOTES FOR FURTHER INFORMATION		MINIMUM CONCRETE COVER = 0.75"					MINIMUM CONCRETE COVER = 1.00"					MINIMUM CONCRETE COVER = 1.50"					MINIMUM CONCRETE COVER = 2.00"				
		12" CASTING POSITION	OTHER BARS	12" CASTING POSITION	OTHER BARS	MINIMUM CENTER TO CENTER SPACING	12" CASTING POSITION	OTHER BARS	12" CASTING POSITION	OTHER BARS	MINIMUM CENTER TO CENTER SPACING	12" CASTING POSITION	OTHER BARS	12" CASTING POSITION	OTHER BARS	MINIMUM CENTER TO CENTER SPACING	12" CASTING POSITION	OTHER BARS	12" CASTING POSITION	OTHER BARS	MINIMUM CENTER TO CENTER SPACING
		UNCOATED		EPOXY COATED			UNCOATED		EPOXY COATED			UNCOATED		EPOXY COATED			UNCOATED		EPOXY COATED		
#3 (#10)	A	12	12	12	12	1 7/8	12	12	12	12	1 7/8	12	12	12	12	1 7/8 UNC	12	12	12	12	1 7/8 UNC
	B	16	16	16	16		16	16	16	16		16	16	16	16	2 5/8 EPOXY	16	16	16	16	2 5/8 EPOXY
#4 (#13)	A	13	12	17	15	2	12	12	14	12	2 1/2	12	12	13	12	2 1/2 UNC	12	12	13	12	2 1/2 UNC
	B	17	16	22	20		16	16	18	16		16	16	17	16	3 1/2 EPOXY	16	16	17	16	3 1/2 EPOXY
#5 (#16)	A	20	15	26	23	2 1/8	16	12	21	18	2 5/8	13	12	18	15	3 1/8	13	12	16	12	3 1/8 UNC
	B	25	20	33	29		21	16	27	24		17	16	23	20		17	16	21	16	4 3/8 EPOXY
#6 (#19)	A	27	20	35	31	2 1/4	22	17	28	25	2 3/4	16	12	21	19	3 3/4	16	12	21	19	3 3/4
	B	34	26	45	40		28	22	37	33		21	16	27	24		21	16	27	24	
#7 (#22)	A	43	33	55	49	2 3/8	35	27	46	41	2 7/8	26	20	34	30	3 7/8	23	18	30	27	4 3/8
	B	54	43	72	64		46	35	60	53		34	26	44	39		30	23	39	35	
#8 (#25)	A	53	41	69	61	2 1/2	44	34	57	51	3	33	26	43	38	4	27	21	35	31	5
	B	68	53	89	79		57	44	74	66		43	33	56	49		34	27	45	40	
#9 (#29)	A	64	49	83	73	2 5/8	54	41	70	62	3 1/8	41	31	53	47	4 1/8	33	25	43	38	5 1/8
	B	83	64	108	95		70	54	91	80		53	41	69	61		43	33	55	49	
#10 (#32)	A	77	59	100	88	2 7/8	65	50	85	75	3 3/8	50	38	65	57	4 1/4	40	31	53	46	5 1/4
	B	99	77	130	115		84	65	110	97		65	50	84	74		52	40	68	60	
#11 (#36)	A	90	69	117	103	3	77	59	100	88	3 1/2	59	46	77	68	4 1/2	48	37	63	56	5 1/2
	B	117	90	152	134		100	77	130	115		77	59	101	89		63	48	82	72	

f'c = 9000 PSI — TABLE 3 (f'c = 9000 PSI) - TENSION DEVELOPMENT AND LAP SPLICE LENGTHS FOR BARS IN WALLS AND SLABS (IN)

SEE GENERAL SHEET NOTES FOR FURTHER INFORMATION		MINIMUM CONCRETE COVER = 0.75"					MINIMUM CONCRETE COVER = 1.00"					MINIMUM CONCRETE COVER = 1.50"					MINIMUM CONCRETE COVER = 2.00"				
		12" CASTING POSITION	OTHER BARS	12" CASTING POSITION	OTHER BARS	MINIMUM CENTER TO CENTER SPACING	12" CASTING POSITION	OTHER BARS	12" CASTING POSITION	OTHER BARS	MINIMUM CENTER TO CENTER SPACING	12" CASTING POSITION	OTHER BARS	12" CASTING POSITION	OTHER BARS	MINIMUM CENTER TO CENTER SPACING	12" CASTING POSITION	OTHER BARS	12" CASTING POSITION	OTHER BARS	MINIMUM CENTER TO CENTER SPACING
		UNCOATED		EPOXY COATED			UNCOATED		EPOXY COATED			UNCOATED		EPOXY COATED			UNCOATED		EPOXY COATED		
#3 (#10)	A	12	12	12	12	1 7/8	12	12	12	12	1 7/8	12	12	12	12	1 7/8 UNC	12	12	12	12	1 7/8 UNC
	B	16	16	16	16		16	16	16	16		16	16	16	16	2 5/8 EPOXY	16	16	16	16	2 5/8 EPOXY
#4 (#13)	A	13	12	16	15	2	12	12	13	12	2 1/2	12	12	12	12	2 1/2 UNC	12	12	12	12	2 1/2 UNC
	B	16	16	21	19		16	16	17	16		16	16	16	16	3 1/2 EPOXY	16	16	16	16	3 1/2 EPOXY
#5 (#16)	A	18	14	24	21	2 1/8	15	12	20	17	2 5/8	13	12	17	15	3 1/8	13	12	15	12	3 1/8 UNC
	B	24	18	31	28		19	16	25	22		16	16	21	19		16	16	20	16	4 3/8 EPOXY
#6 (#19)	A	25	19	33	29	2 1/4	20	16	27	24	2 3/4	15	12	20	17	3 3/4	15	12	20	17	3 3/4
	B	32	25	42	37		27	21	35	31		20	16	25	23		20	16	25	23	
#7 (#22)	A	40	31	52	46	2 3/8	33	26	43	38	2 7/8	25	19	32	28	3 7/8	22	17	29	25	4 3/8
	B	52	40	68	60		43	33	56	50		32	25	42	37		28	22	37	33	
#8 (#25)	A	50	38	65	57	2 1/2	41	32	54	48	3	31	24	41	36	4	25	19	33	29	5
	B	64	50	84	74		54	41	70	62		40	31	53	47		32	25	42	37	
#9 (#29)	A	60	46	78	69	2 5/8	50	39	66	58	3 1/8	38	30	50	44	4 1/8	31	24	40	36	5 1/8
	B	78	60	102	90		66	51	86	76		50	38	65	57		40	31	52	46	
#10 (#32)	A	72	56	94	83	2 7/8	61	47	80	70	3 3/8	47	36	61	54	4 1/4	38	29	50	44	5 1/4
	B	94	72	122	108		79	61	104	92		61	47	79	70		49	38	64	57	
#11 (#36)	A	85	65	110	98	3	72	56	94	83	3 1/2	56	43	73	64	4 1/2	46	35	60	53	5 1/2
	B	110	85	144	127		94	72	123	108		73	56	95	84		59	46	77	68	

f'c = 10000 PSI+ — TABLE 3 (f'c = 10000 PSI AND ABOVE) - TENSION DEVELOPMENT AND LAP SPLICE LENGTHS FOR BARS IN WALLS AND SLABS (IN)

SEE GENERAL SHEET NOTES FOR FURTHER INFORMATION		MINIMUM CONCRETE COVER = 0.75"					MINIMUM CONCRETE COVER = 1.00"					MINIMUM CONCRETE COVER = 1.50"					MINIMUM CONCRETE COVER = 2.00"				
		12" CASTING POSITION	OTHER BARS	12" CASTING POSITION	OTHER BARS	MINIMUM CENTER TO CENTER SPACING	12" CASTING POSITION	OTHER BARS	12" CASTING POSITION	OTHER BARS	MINIMUM CENTER TO CENTER SPACING	12" CASTING POSITION	OTHER BARS	12" CASTING POSITION	OTHER BARS	MINIMUM CENTER TO CENTER SPACING	12" CASTING POSITION	OTHER BARS	12" CASTING POSITION	OTHER BARS	MINIMUM CENTER TO CENTER SPACING
		UNCOATED		EPOXY COATED			UNCOATED		EPOXY COATED			UNCOATED		EPOXY COATED			UNCOATED		EPOXY COATED		
#3 (#10)	A	12	12	12	12	1 7/8	12	12	12	12	1 7/8	12	12	12	12	1 7/8 UNC	12	12	12	12	1 7/8 UNC
	B	16	16	16	16		16	16	16	16		16	16	16	16	2 5/8 EPOXY	16	16	16	16	2 5/8 EPOXY
#4 (#13)	A	12	12	16	14	2	12	12	13	12	2 1/2	12	12	12	12	2 1/2 UNC	12	12	12	12	2 1/2 UNC
	B	16	16	20	18		16	16	16	16		16	16	16	16	3 1/2 EPOXY	16	16	16	16	3 1/2 EPOXY
#5 (#16)	A	18	14	23	20	2 1/8	14	12	19	16	2 5/8	12	12	16	14	3 1/8	12	12	14	12	3 1/8 UNC
	B	23	18	30	26		18	16	24	21		16	16	20	18		16	16	19	16	4 3/8 EPOXY
#6 (#19)	A	24	18	31	27	2 1/4	19	15	25	22	2 3/4	14	12	19	17	3 3/4	14	12	19	17	3 3/4
	B	31	24	40	36		25	19	33	29		19	16	24	21		19	16	24	21	
#7 (#22)	A	38	29	50	44	2 3/8	32	24	41	36	2 7/8	23	18	31	27	3 7/8	21	16	27	24	4 3/8
	B	49	38	64	57		41	31	53	47		30	23	40	35		27	21	35	31	
#8 (#25)	A	47	36	62	54	2 1/2	39	30	51	45	3	30	23	39	34	4	24	18	31	27	5
	B	61	47	80	71		51	39	67	59		38	30	50	44		31	24	40	36	
#9 (#29)	A	57	44	74	66	2 5/8	48	37	63	55	3 1/8	36	28	47	42	4 1/8	29	23	38	34	5 1/8
	B	74	57	97	85		62	48	81	72		47	36	62	54		38	29	50	44	
#10 (#32)	A	68	53	89	79	2 7/8	58	45	76	67	3 3/8	44	34	58	51	4 1/4	36	28	47	42	5 1/4
	B	89	68	116	103		75	58	98	87		58	44	75	67		47	36	61	54	
#11 (#36)	A	80	62	105	93	3	69	53	90	79	3 1/2	53	41	69	61	4 1/2	43	33	57	50	5 1/2
	B	104	80	136	120		89	69	116	103		69	53	90	79		56	43	73	65	

TABLE 4 - TENSION DEVELOPMENT LENGTHS OF STANDARD HOOKS AND ASTM A970 TERMINATORS

SEE GENERAL NOTES	LENGTHS (IN) PER CONCRETE STRENGTH													
	f'c = 4000 PSI		f'c = 5000 PSI		f'c = 6000 PSI		f'c = 7000 PSI		f'c = 8000 PSI		f'c = 9000 PSI		f'c = 10000 PSI	
BAR SIZE	UNCOATED	EPOXY	UNCOATED	EPOXY	UNCOATED	EPOXY	UNCOATED	EPOXY	UNCOATED	EPOXY	UNCOATED	EPOXY	UNCOATED	EPOXY
#3 (#10)	7	9	7	8	6	7	6	7	6	6	6	6	6	6
#4 (#13)	10	12	9	11	8	10	7	9	7	8	7	8	6	7
#5 (#16)	12	15	11	13	10	12	9	11	9	10	8	10	8	9
#6 (#19)	15	17	13	16	12	14	11	13	10	12	10	12	9	11
#7 (#22)	17	20	15	18	14	17	13	15	12	14	11	14	11	13
#8 (#25)	19	23	17	21	16	19	15	18	14	16	13	15	12	15
#9 (#29)	22	26	19	23	18	21	16	20	15	18	15	17	14	17
#10 (#32)	24	29	22	26	20	24	19	22	17	21	16	20	16	19
#11 (#36)	27	32	24	29	22	27	21	25	19	23	18	22	17	21
#14 (#43)	32	39	29	35	27	32	25	30	23	28	22	26	21	25
#18 (#57)	43	52	39	46	35	42	33	39	31	37	29	35	27	33

TABLE 5 - COMPRESSION DEVELOPMENT AND LAP SPLICE LENGTHS FOR UNCOATED AND EPOXY-COATED BARS

SEE GENERAL NOTES	LENGTHS (IN) PER CONCRETE STRENGTH							
	f'c = 4000 PSI	f'c = 5000 PSI	f'c = 6000 PSI	f'c = 7000 PSI	f'c = 8000 PSI	f'c = 9000 PSI	f'c = 10000 PSI	LAP SPLICE
#3 (#10)	8	8	8	8	8	8	8	12
#4 (#13)	10	9	9	9	9	9	9	15
#5 (#16)	12	12	12	12	12	12	12	19
#6 (#19)	15	14	14	14	14	14	14	23
#7 (#22)	17	16	16	16	16	16	16	27
#8 (#25)	19	18	18	18	18	18	18	30
#9 (#29)	22	21	21	21	21	21	21	34
#10 (#32)	24	23	23	23	23	23	23	38
#11 (#36)	27	26	26	26	26	26	26	43
#14 (#43)	32	31	31	31	31	31	31	N/A
#18 (#57)	43	41	41	41	41	41	41	N/A

TABLE 6 - TENSION DEVELOPMENT LENGTHS FOR PLAIN WELDED WIRE FABRIC

WIRE	WIRE SPACING (in)	DEVELOPMENT LENGTH (in)				LAP SPLICE (in)			
		CROSS WIRE SPACING (in)				CROSS WIRE SPACING (in)			
		4	6	8	12	4	6	8	12
W0.5 TO W2	4	6	8	10	14	8	8	10	14
	6	6	8	10	14	6	8	10	14
	8	6	8	10	14	6	8	10	14
	12	6	8	10	14	6	8	10	14
W2.5 TO W3.5	4	9	9	10	14	14	14	14	14
	6	6	8	10	14	9	9	10	14
	8	6	8	10	14	7	8	10	14
	12	6	8	10	14	6	8	10	14
W4 TO W4.5	4	12	12	12	14	18	18	18	18
	6	8	8	10	14	12	12	12	14
	8	6	8	10	14	9	9	10	14
	12	6	8	10	14	6	8	10	14
W5 TO W5.5	4	15	15	15	15	22	22	22	22
	6	10	10	10	14	15	15	15	15
	8	8	8	10	14	11	11	11	14
	12	6	8	10	14	8	8	10	14
W6	4	16	16	16	16	24	24	24	24
	6	11	12	11	14	16	16	16	16
	8	8	8	10	14	12	12	12	14
	12	6	8	10	14	8	8	10	14

PRIME DESIGNER

WALKER CONSULTANTS
2895 Greenspoint Parkway, Suite 600
Hoffman Estates IL 60169
847.697.2640 Ph
www.walkerconsultants.com

ARCHITECTURAL

Studio Level 1
STUDIO LEVEL 1
1001 North Warren Street
Gary, IN 46403
219.951.0214 Ph
www.studiolevel1.com

PRELIMINARY - DO NOT USE FOR CONSTRUCTION

Mount Prospect

MAPLE STREET PARKING DECK

MOUNT PROSPECT, IL

MARK	DATE	DESCRIPTION
		REVISIONS

SHEET ISSUE:	95% CONSTRUCTION DOCUMENTS
SHEET ISSUE DATE:	10/16/2019
PROJECT NO:	31-8504.00
DRAWN BY:	JVK
CHECKED BY:	DJM

COPYRIGHT © 2019. ALL RIGHTS RESERVED. NO PART OF THIS DOCUMENT MAY BE REPRODUCED IN ANY FORM OR BY ANY MEANS WITHOUT PERMISSION FROM WALKER CONSULTANTS.

SHEET TITLE:
LAP SPLICE SCHEDULES

S-651

10/17/2019 8:36:49 AM C:\Revit Projects\31-8504.00-MAPLE STREET PG-STRUCT_R19_jvkdappel.rvt

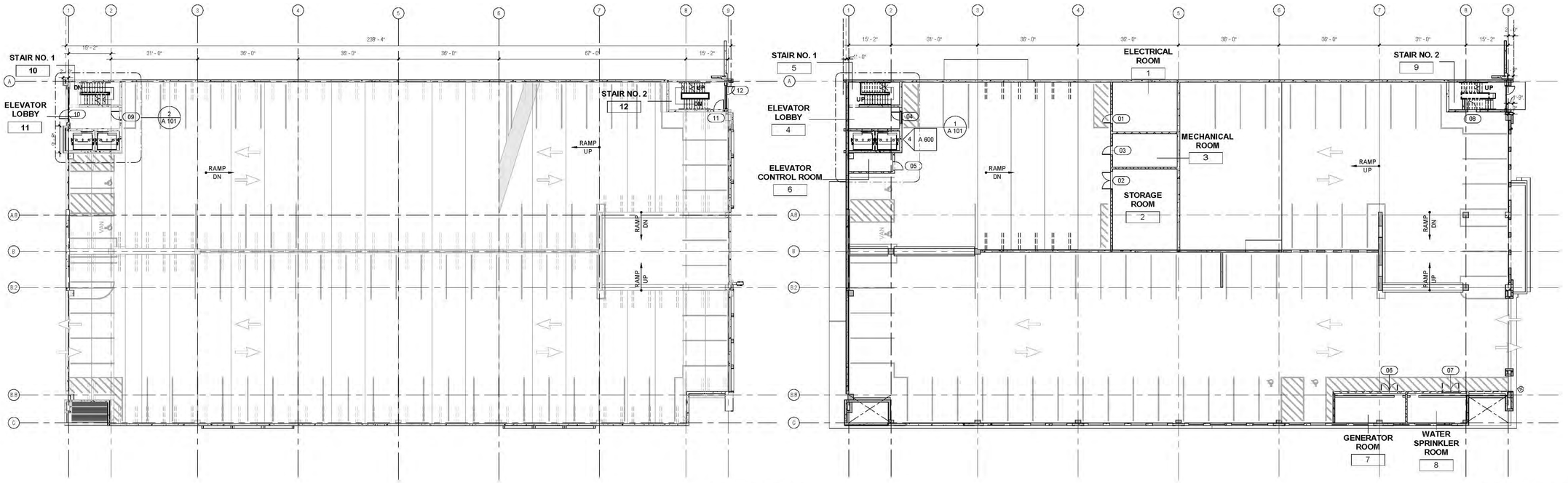

3 A 100 SECOND TIER PLAN
1/16" = 1'-0"

1 A 100 GROUND TIER PLAN
1/16" = 1'-0"

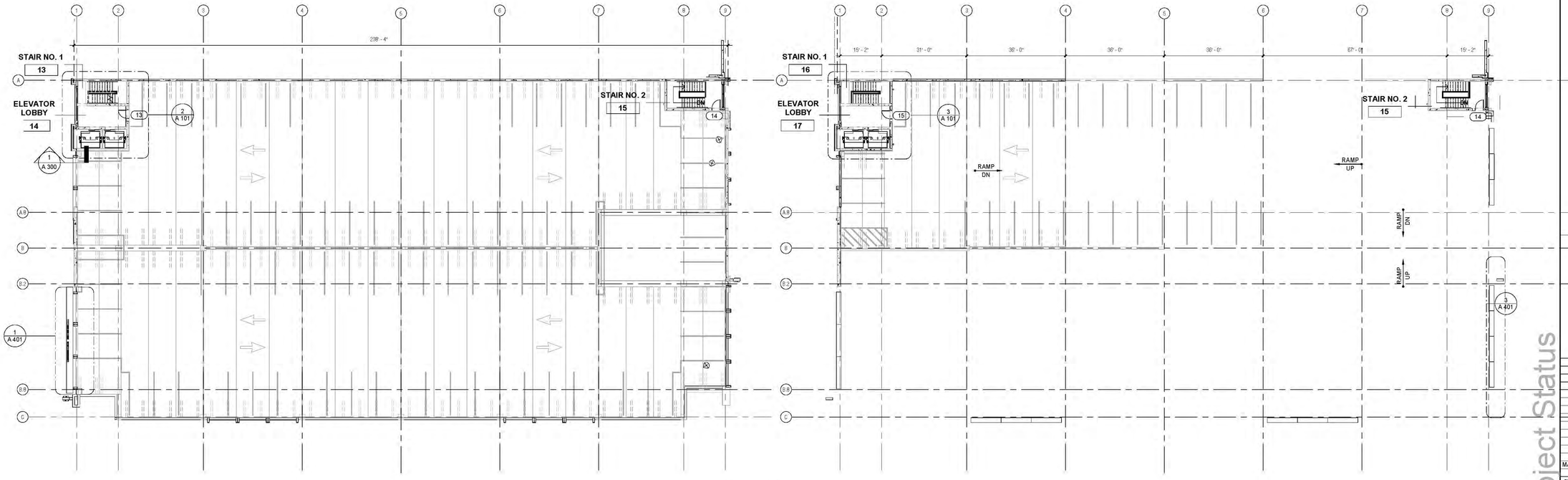

2 A 100 THIRD TIER PLAN
1/16" = 1'-0"

4 A 100 TOP TIER PLAN
1/16" = 1'-0"

Project Status

PRIME DESIGNER

WALKER CONSULTANTS

2895 Greenspoint Parkway, Suite 600
Hoffman Estates IL 60169
847.697.2640 Ph
www.walkerconsultants.com

ARCHITECTURAL

Studio Level 1

STUDIO LEVEL 1
1001 North Warren Street
Gary, IN 46403
219.951.0214 Ph
www.studiolevel1.com

Mount Prospect

Maple Street Parking Deck

MOUNT PROSPECT, IL

MARK	DATE	DESCRIPTION
		REVISIONS
SHEET ISSUE:		DESIGN DEVELOPMENT
SHEET ISSUE DATE:		08/16/2019
PROJECT NO:		---
DRAWN BY:		GC
CHECKED BY:		---

COPYRIGHT © 2019. ALL RIGHTS RESERVED. NO PART OF THIS DOCUMENT MAY BE REPRODUCED IN ANY FORM OR BY ANY MEANS WITHOUT PERMISSION FROM WALKER CONSULTANTS.

SHEET TITLE:
ARCHITECTURAL FLOOR PLANS

A 100

10/17/2019 9:21:48 AM C:\Users\gchapman\Documents\SL1 PROJECTS\Mt Prospect\BIM R&BIM CD SET 10.15.19.rvt

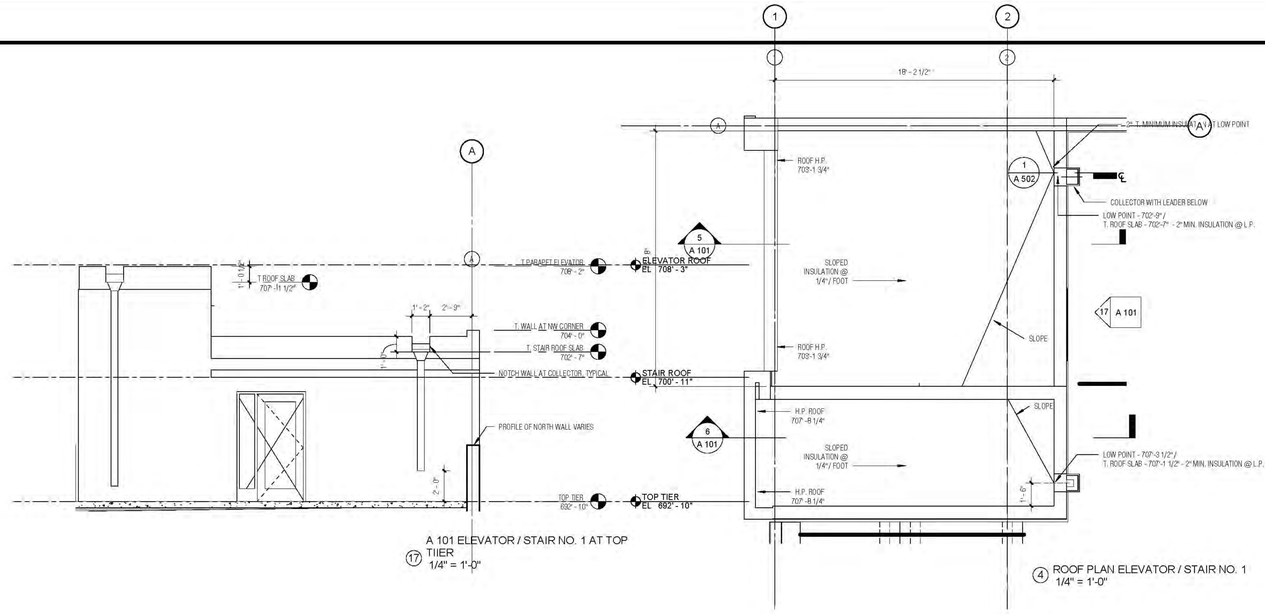

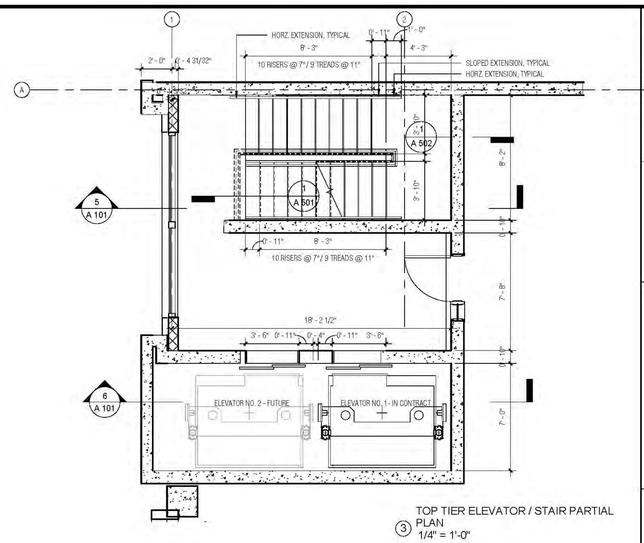

ROOF PLAN NOTES

1. MECHANICALLY ATTACHED 60 MIL WHITE TPO ROOFING MEMBRANE SYSTEM AND POLYISOCYANURATE INSULATION (TO ACHIEVE R-30 MIN.), TWO LAYERS MINIMUM, STAGGER JOINTS; OVER CONCRETE SLAB
2. PREFINISHED METAL SCUPPER, PREFINISHED METAL COLLECTION HEAD, AND PREFINISHED METAL DOWNSPOUTS.

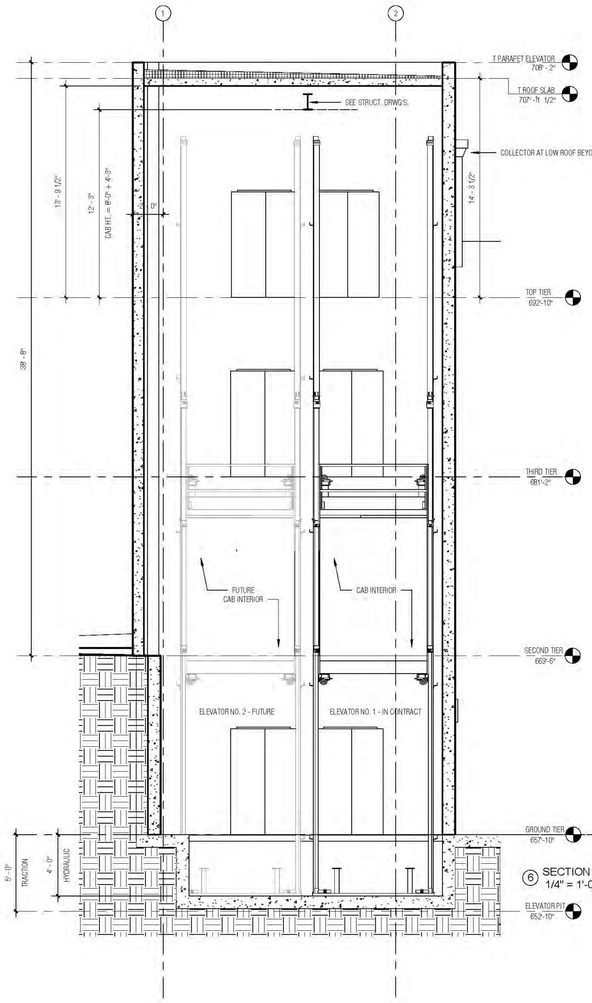

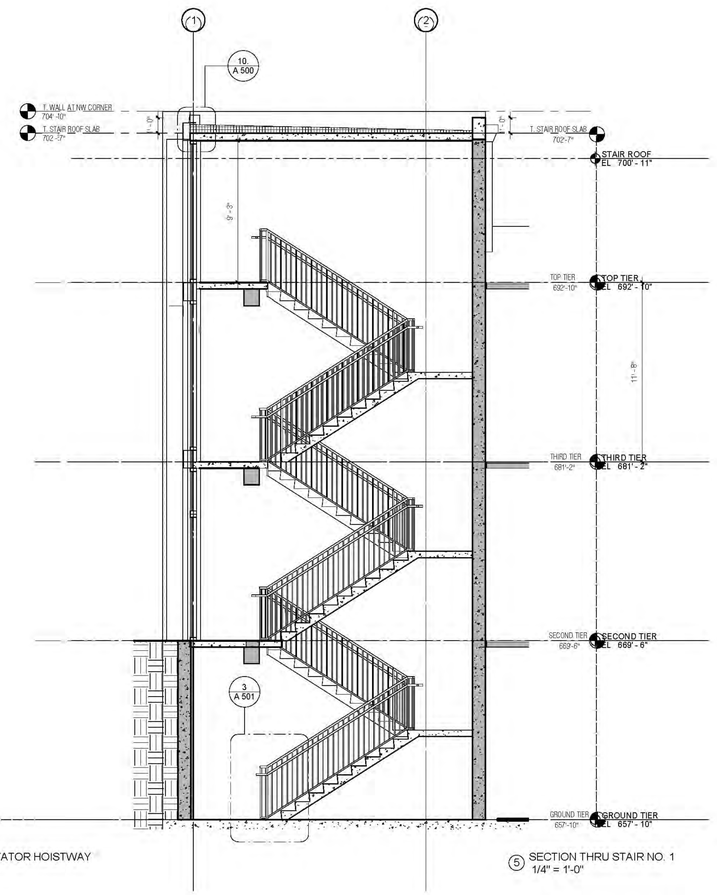

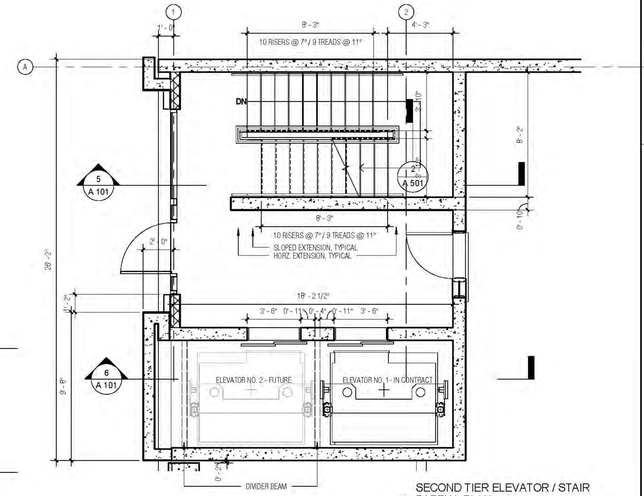

NOTE: THIRD TIER ELEVATOR / STAIR PLAN IS SIMILAR

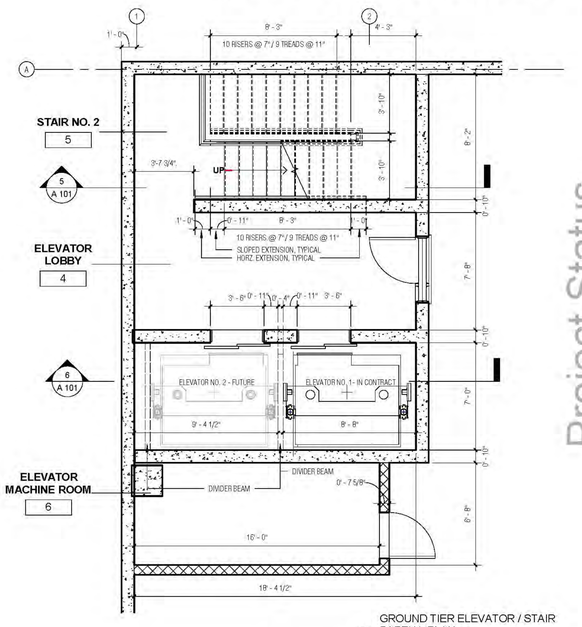

PRIME DESIGNER

WALKER CONSULTANTS

2895 Greenspoint Parkway, Suite 600
Hoffman Estates IL 60169
847.697.2640 Ph
www.walkerconsultants.com

ARCHITECTURAL

Studio Level 1

STUDIO LEVEL 1
1001 North Warren Street
Gary, IN 46403
219.951.0214 Ph
www.studiolevel1.com

Mount Prospect

Maple Street Parking Deck

MOUNT PROSPECT, IL

MARK	DATE	DESCRIPTION
1	07/24/2019	SCHEMATIC DESIGN PACKAGE

REVISIONS

SHEET ISSUE:	DESIGN DEVELOPMENT
SHEET ISSUE DATE:	08/16/2019
PROJECT NO:	—
DRAWN BY:	GC
CHECKED BY:	—

Project Status

COPYRIGHT © 2019. ALL RIGHTS RESERVED. NO PART OF THIS DOCUMENT MAY BE REPRODUCED IN ANY FORM OR BY ANY MEANS WITHOUT PERMISSION FROM WALKER CONSULTANTS.

SHEET TITLE:
NW ELEVATOR/ STAIR ENLARGED PLANS

A 101

10/17/2019 9:22:01 AM C:\Users\gchapman\Documents\SL1 PROJECTS\Mt. Prospect\BIM R&BIM CD SET 10.15.19.rvt

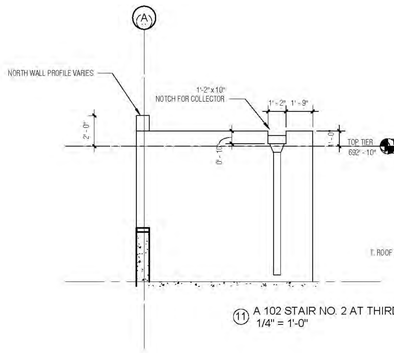

11 A 102 STAIR NO. 2 AT THIRD TIER
1/4" = 1'-0"

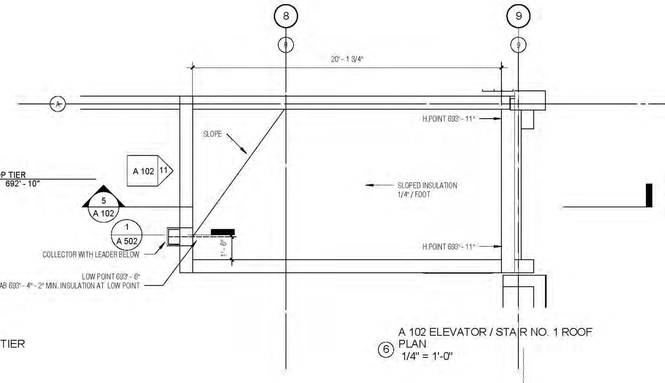

6 A 102 ELEVATOR / STAIR NO. 1 ROOF PLAN
1/4" = 1'-0"

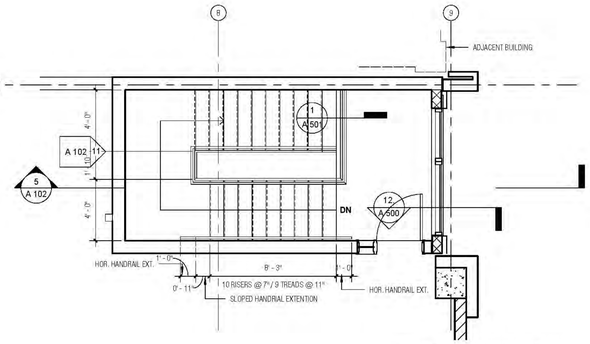

4 Level 4.1 - STAIR NO. 1 PLAN
1/4" = 1'-0"

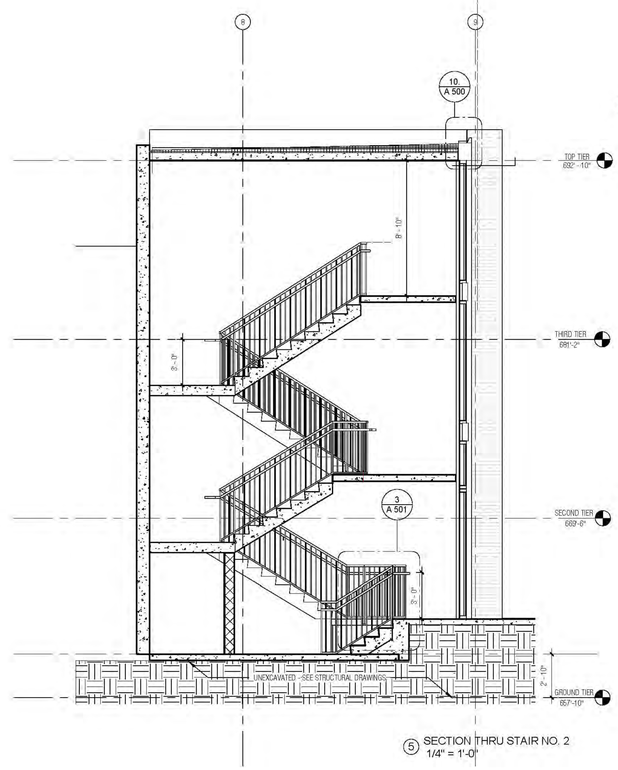

5 SECTION THRU STAIR NO. 2
1/4" = 1'-0"

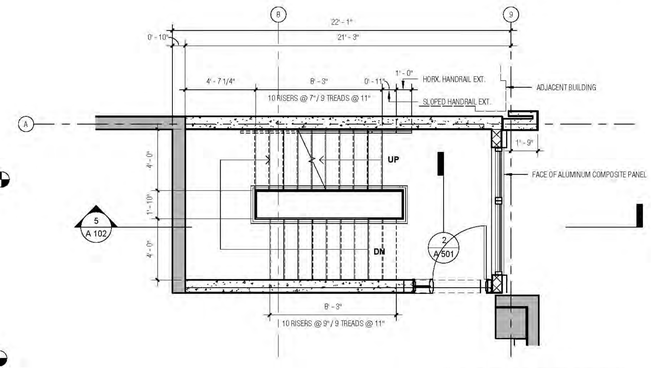

3 Level 3.1 - STAIR NO. 1 PLAN
1/4" = 1'-0"

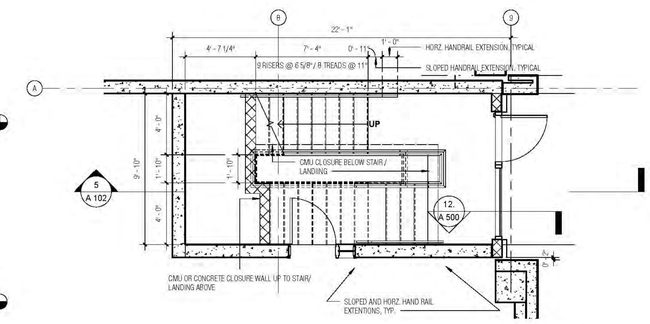

2 Level 2.1 - STAIR NO. 1 PLAN
1/4" = 1'-0"

PRIME DESIGNER

WALKER CONSULTANTS

2895 Greenspoint Parkway, Suite 600
Hoffman Estates IL 60169
847.697.2640 Ph
www.walkerconsultants.com

ARCHITECTURAL

Studio Level 1

STUDIO LEVEL 1
1001 North Warren Street
Gary, IN 46403
219.951.0214 Ph
www.studiolevel1.com

Mount Prospect

Maple Street Parking Deck

MOUNT PROSPECT, IL

MARK	DATE	DESCRIPTION
		REVISIONS
SHEET ISSUE:		DESIGN DEVELOPMENT
SHEET ISSUE DATE:		08/16/2019
PROJECT NO:		—
DRAWN BY:		GC
CHECKED BY:		—

COPYRIGHT © 2019. ALL RIGHTS RESERVED. NO PART OF THIS DOCUMENT MAY BE REPRODUCED IN ANY FORM OR BY ANY MEANS WITHOUT PERMISSION FROM WALKER CONSULTANTS.

SHEET TITLE:
NE STAIR ENLARGED PLANS

A 102

Project Status

10/17/2019 9:22:09 AM C:\Users\gchapman\Documents\SLI1 PROJECTS\Mt Prospect\BIM 360\Mt Prospect BIM CD SET 10.15.19.rvt

ELEVATION NOTES

SYMBOL	DESCRIPTION
1	PREFINISHED METAL SCUPPER WITH COLLECTOR HEAD AND DOWNSPOUT PROVIDE SPLASH BLOCK AT LEADERS IN LANDSCAPED AREAS
2	PREFINISHED METAL COPING, WALL CAP, COLOR: TBD, FINISH SYSTEM KYNAR 500 OR EQUAL
3	PREFINISHED STOREFRONT AND OR WINDOW SYSTEM, SEE MATERIAL SCHEDULE FOR GLASS TYPES, FINISH FLUOROPOYMER BY PPG, OR EQUAL
4	PIN MOUNTED INDIVIGUAL METAL LETTERS, NON ILLUMINATED, BY OWNER
5	INTERNALLY ILLUMINATED SIGNAGE BY OWNER, GC TO PROVIDE ELECTRICAL CIRCUT AND COORDINATE FINAL CONNECTIONS
6	BLADE SIGN, WITH INTERNALLY ILLUMINATED SIGNAGE BY OWNER, GC TO PROVIDE STRUCTURAL CONNECTION TO BUILDING COLUMN AND FLASH ALL WALL PENETRATIONS, PROVIDE ELECTRICAL CIRCUT AND COORDINATE FINAL CONNECTIONS
7	WALL MOUNTED LIGHT FIXTURE
8	METAL ORNAMENTAL RAILINGS, FACTORY FINISHED, BLACK
9	OPEN, TUBULAR ALUMINUM FRAMED CANOPY, NO ROOF MATERIAL OR DRAINS REQUIRED, WITH HIGH PERFORMANCE COATING
10	RIBBED FORMLINER WITH STAINED CONCRETE SURFACE - BETWEEN FRAMES ONLY

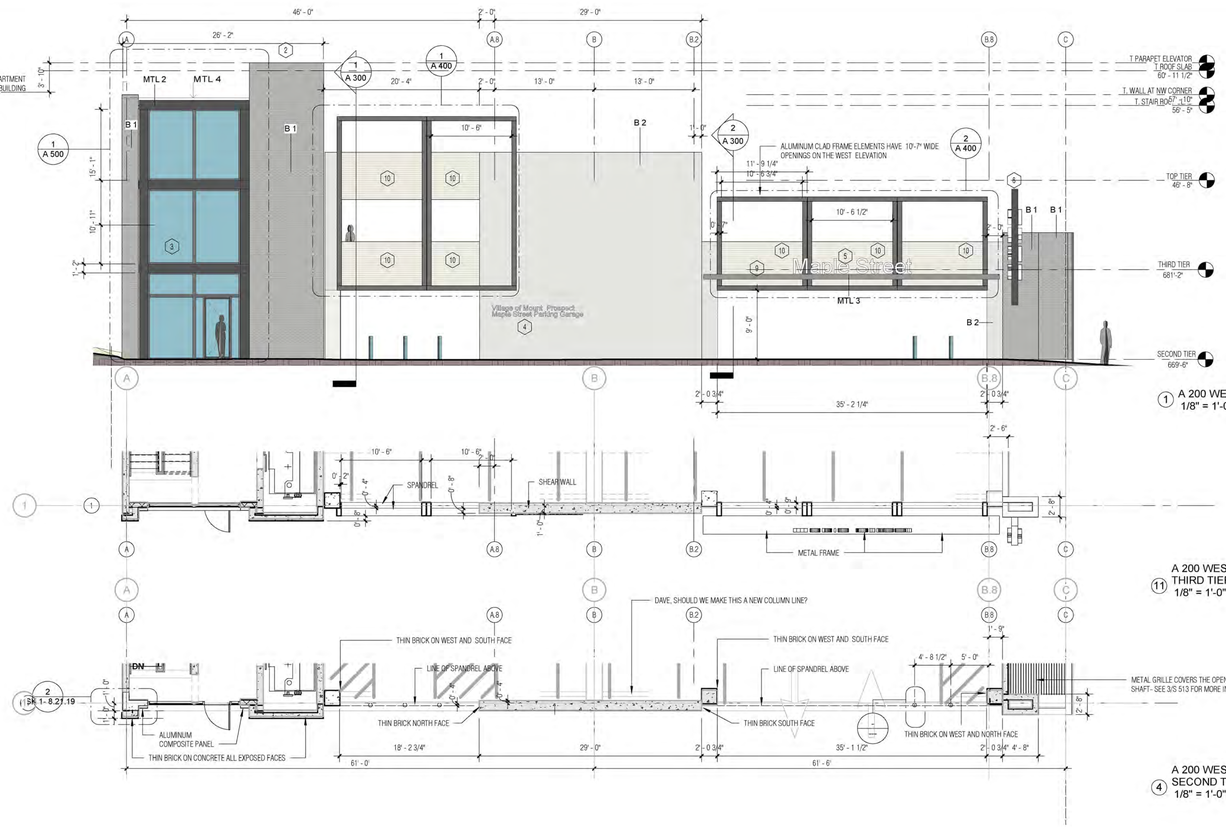

1 A 200 WEST ELEVATION
1/8" = 1'-0"

11 A 200 WEST PARTIAL FLOOR PLAN - THIRD TIER
1/8" = 1'-0"

4 A 200 WEST PARTIAL FLOOR PLAN - SECOND TIER
1/8" = 1'-0"

SCHEDULE OF MATERIALS

SYMBOL	DESCRIPTION
MASONRY - THIN BRICK ON PRECAST PANELS	
B 1	ENDICOTT THIN BRICK COLOR TO BE DETERMINED
B 2	ENDICOTT THIN BRICK COLOR TO BE DETERMINED
MULLIONS	
M-1	ALUMINUM FINISH: DARK GREY OR BLACK FLUOROPOLYMER COATING, PPG INDUSTRIES
COPING	
M-2	KYNAR 500 OR EQUAL: MANUFACTURER STANDARD GREY BASED ON BRICK TYPE SELECTED
METAL FABRICATIONS	
MTL-1	HIGH PERFORMANCE COATING SYSTEM: BASED ON PRODUCT/DETAILING COLOR: DARK GREY OR BLACK
MTL-2	ALUMINUM COMPOSITE PANELS WITH FACTORY FINISH, BASIS OF DESIGN: ALPOLIC COLOR: DARK GREY OR BLACK
MTL-3	HIGH PERFORMANCE COATING SYSTEM: TNEMEC OR EQUAL, FOP OPEN CANOPY FRAMING COLOR: GREY
MTL-4	PREFINISHED METAL COPING/ WALL CAP, COLOR: TBD, FINISH SYSTEM KYNAR 500 OR EQUAL
GLASS TYPES	
GL-1	VISION LITE: 1" INSULATED GLAZING UNIT, OUTER LITE - CLEAR INNER LITE CLEAR - LOW E COATING SOLARBAN 60 ON SURFACE # 2
GL-2	VISION LITE: TEMPERED MONOLITHIC CLEAR GLASS
CONCRETE STAIN	
ST-1	PENTRATING OPAQUE COATING - OFF WHITE

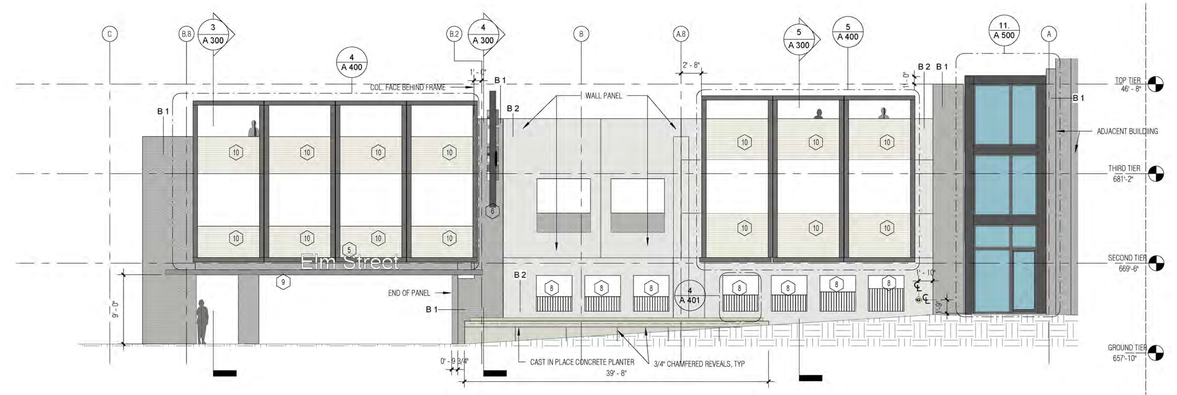

3 A 200 EAST ELEVATION
1/8" = 1'-0"

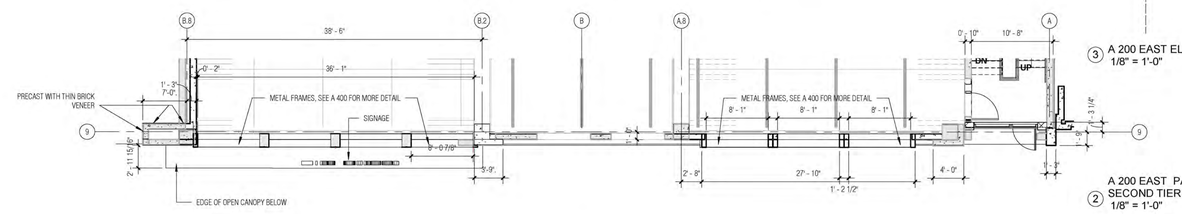

2 A 200 EAST PARTIAL FLOOR PLAN - SECOND TIER
1/8" = 1'-0"

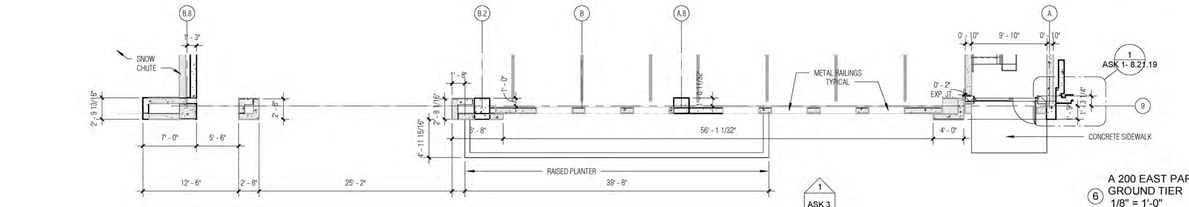

6 A 200 EAST PARTIAL FLOOR PLAN - GROUND TIER
1/8" = 1'-0"

PRIME DESIGNER

WALKER CONSULTANTS

2895 Greenspoint Parkway, Suite 600
Hoffman Estates IL 60169
847.697.2640 Ph
www.walkerconsultants.com

ARCHITECTURAL

Studio Level 1

STUDIO LEVEL 1
1001 North Warren Street
Gary, IN 46403
219.951.0214 Ph
www.studiolevel1.com

Mount Prospect

Maple Street Parking Deck

MOUNT PROSPECT, IL

Project Status

MARK	DATE	DESCRIPTION
		REVISIONS
SHEET ISSUE:		DESIGN DEVELOPMENT
SHEET ISSUE DATE:		08/16/2019
PROJECT NO:		---
DRAWN BY:		GC
CHECKED BY:		---

COPYRIGHT © 2019. ALL RIGHTS RESERVED. NO PART OF THIS DOCUMENT MAY BE REPRODUCED IN ANY FORM OR BY ANY MEANS WITHOUT PERMISSION FROM WALKER CONSULTANTS.

SHEET TITLE:
WEST AND EAST ELEVATIONS

A 200

10/17/2019 9:22:24 AM C:\Users\gchapman\Documents\SL1 PROJECTS\Mt Prospect\BIM 6\BIM CD SET 10.15.19.rvt

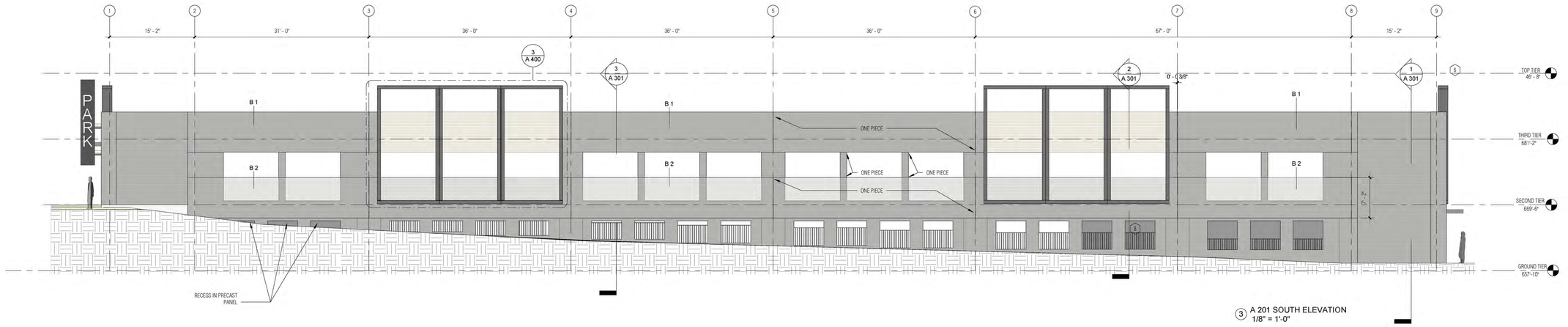

3 A 201 SOUTH ELEVATION
1/8" = 1'-0"

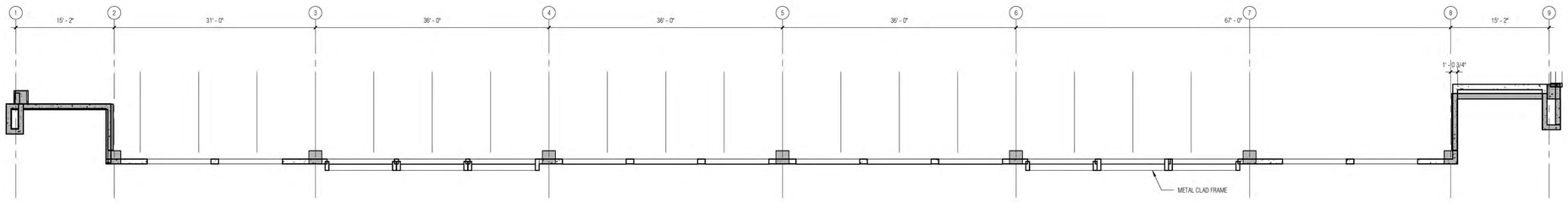

2 A 201 SOUTH PARTIAL FLOOR PLAN - SECOND TIER
1/8" = 1'-0"

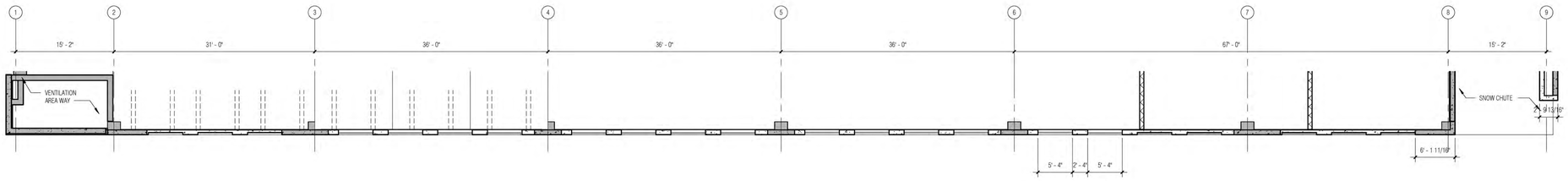

1 A 201 SOUTH PARTIAL FLOOR PLAN - GROUND TIER
1/8" = 1'-0"

ELEVATION NOTES

SYMBOL	DESCRIPTION
1	PREFINISHED METAL SCUPPER WITH COLLECTOR HEAD AND DOWNSPOUT PROVIDE SPLASH BLOCK AT LEADERS IN LANDSCAPED AREAS
2	PREFINISHED METAL COPING, WALL CAP, COLOR: TBD, FINISH SYSTEM KYNAR 500 OR EQUAL
3	PREFINISHED STOREFRONT AND OR WINDOW SYSTEM, SEE MATERIAL SCHEDULE FOR GLASS TYPES, FINISH FLUOROPOYMER BY PPG, OR EQUAL
4	PIN MOUNTED INDIVIGUAL METAL LETTERS, NON ILLUMINATED, BY OWNER
5	INTERNALLY ILLUMINATED SIGNAGE BY OWNER, GC TO PROVIDE ELECTRICAL CIRCUT AND COORDINATE FINAL CONNECTIONS
6	BLADE SIGN, WITH INTERNALLY ILLUMINATED SIGNAGE BY OWNER, GC TO PROVIDE STRUCTURAL CONNECTION TO BUILDING COLUMN AND FLASH ALL WALL PENETRATIONS, PROVIDE ELECTRICAL CIRCUT AND COORDINATE FINAL CONNECTIONS
7	WALL MOUNTED LIGHT FIXTURE
8	METAL ORNAMENTAL RAILINGS, FACTORY FINISHED, BLACK
9	OPEN, TUBULAR ALUMINUM FRAMED CANOPY, NO ROOF MATERIAL OR DRAINS REQUIRED, WITH HIGH PERFORMANCE COATING
10	RIBBED FORMLINER WITH STAINED CONCRETE SURFACE - BETWEEN FRAMES ONLY

PRIME DESIGNER

WALKER CONSULTANTS

2895 Greenspoint Parkway, Suite 600
Hoffman Estates IL 60169
847.697.2640 Ph
www.walkerconsultants.com

ARCHITECTURAL

Studio Level 1

STUDIO LEVEL 1
1001 North Warren Street
Gary, IN 46403
219.951.0214 Ph
www.studiolevel1.com

Mount Prospect

Maple Street Parking Deck

MOUNT PROSPECT, IL

MARK	DATE	DESCRIPTION
		REVISIONS
SHEET ISSUE:		DESIGN DEVELOPMENT
SHEET ISSUE DATE:		08/16/2019
PROJECT NO:		---
DRAWN BY:		GC
CHECKED BY:		---

COPYRIGHT © 2019. ALL RIGHTS RESERVED. NO PART OF THIS DOCUMENT MAY BE REPRODUCED IN ANY FORM OR BY ANY MEANS WITHOUT PERMISSION FROM WALKER CONSULTANTS.

SHEET TITLE:
SOUTH ELEVATION

Project Status

A 201

10/17/2019 9:22:37 AM C:\Users\gchapman\Documents\SL1 PROJECTS\Mt Prospect\BIM 6\BIM CD SET 10.15.19.rvt

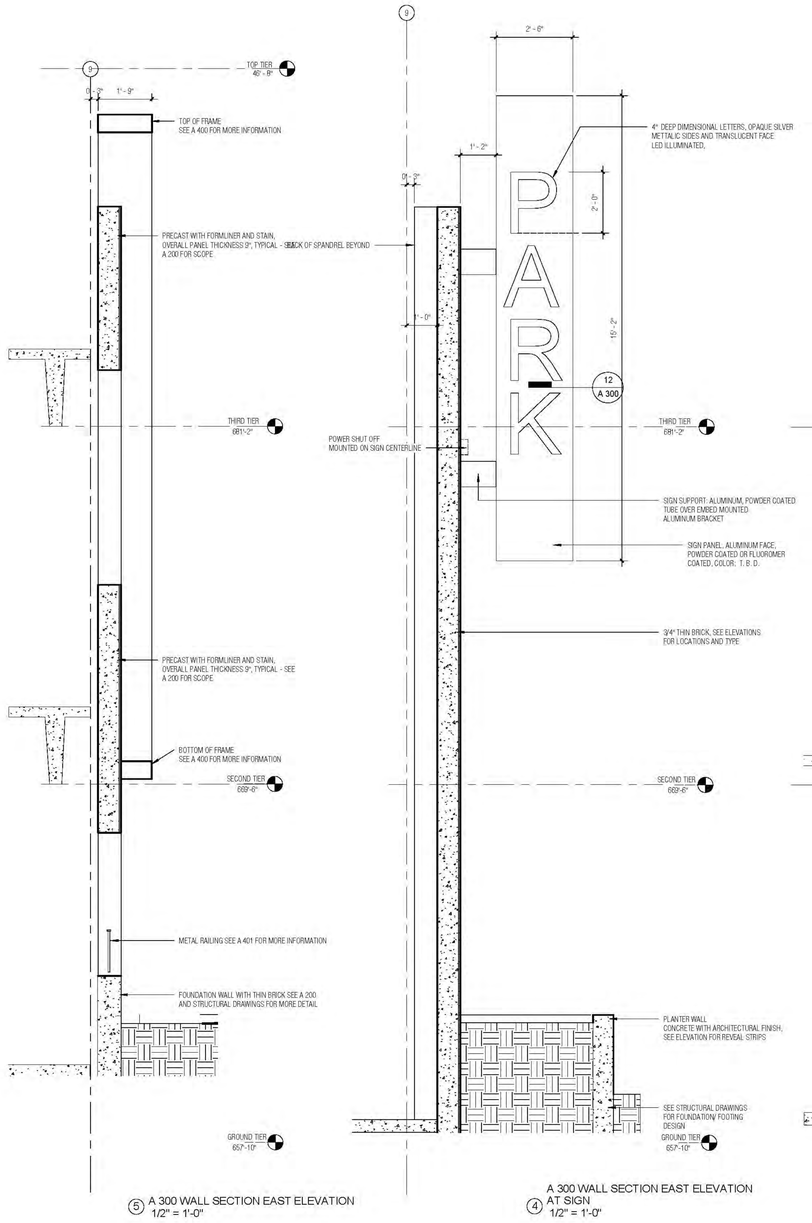

5 A 300 WALL SECTION EAST ELEVATION
1/2" = 1'-0"

4 A 300 WALL SECTION EAST ELEVATION AT SIGN
1/2" = 1'-0"

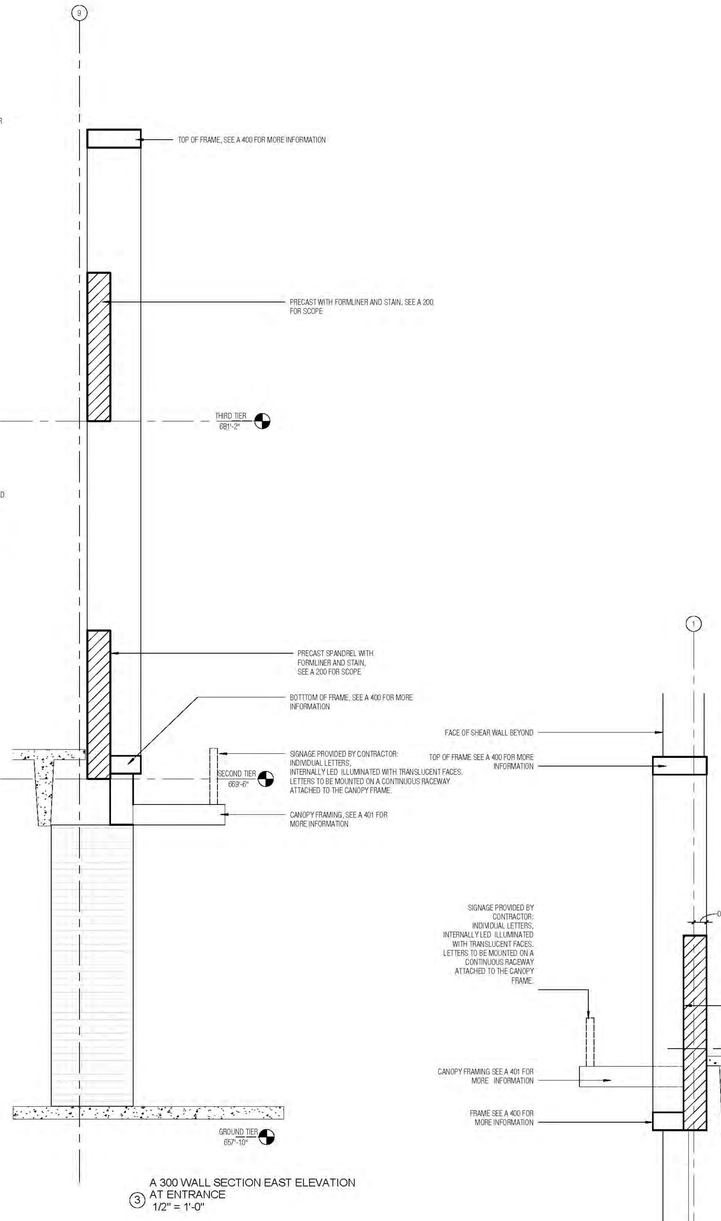

3 A 300 WALL SECTION EAST ELEVATION AT ENTRANCE
1/2" = 1'-0"

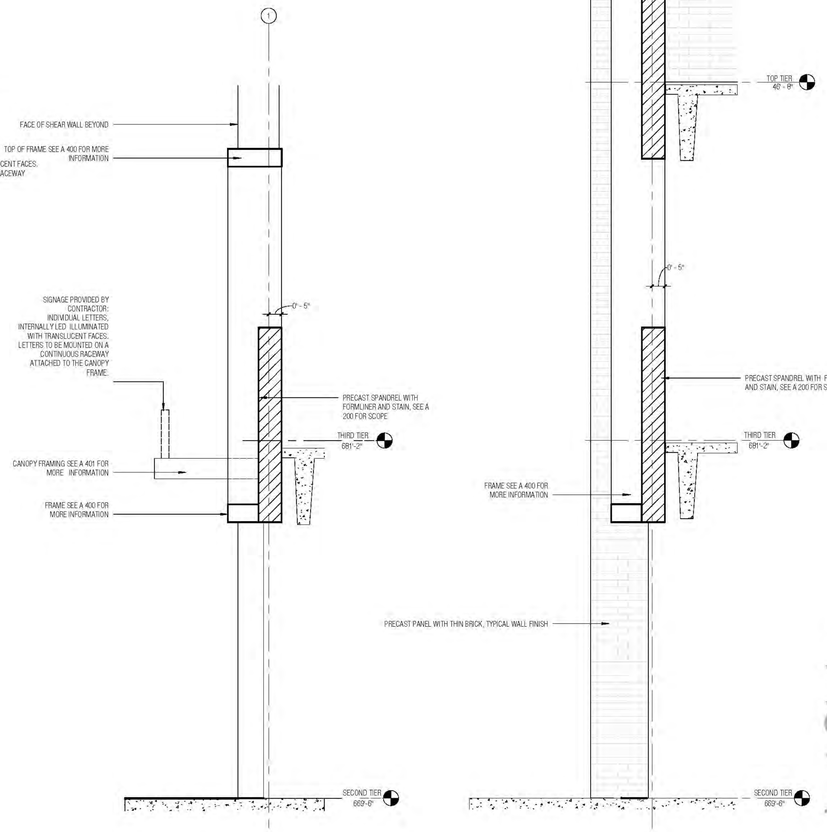

2 A 300 WALL SECTION WEST ELEVATION AT ENTRANCE
1/2" = 1'-0"

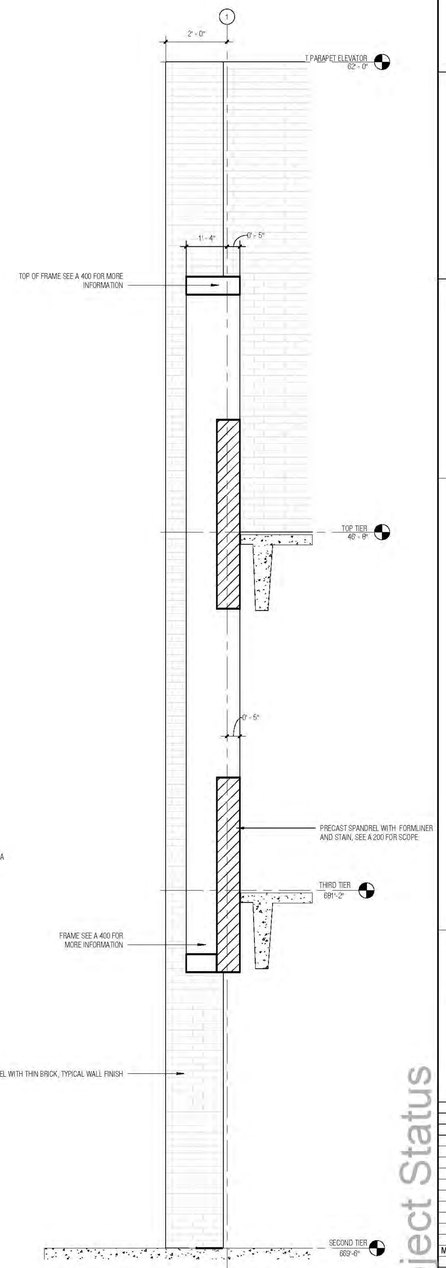

1 A 300 WALL SECTION - WEST ELEVATION
1/2" = 1'-0"

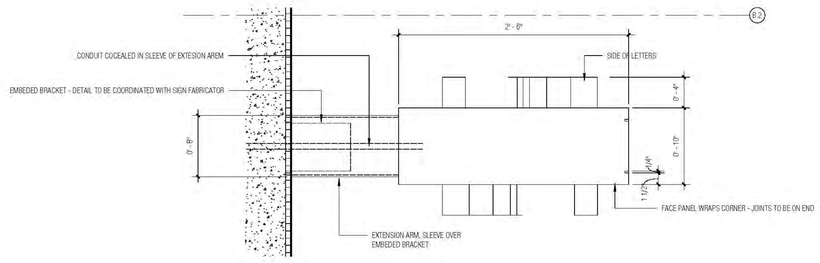

12 A 300 SECTION THRU BLADE SIGN
1 1/2" = 1'-0"

PRIME DESIGNER

WALKER CONSULTANTS

2895 Greenspoint Parkway, Suite 600
Hoffman Estates IL 60169
847.697.2640 Ph
www.walkerconsultants.com

ARCHITECTURAL

Studio Level 1

STUDIO LEVEL 1
1001 North Warren Street
Gary, IN 46403
219.951.0214 Ph
www.studiolevel1.com

Mount Prospect MP

Maple Street Parking Deck

MOUNT PROSPECT, IL

MARK	DATE	DESCRIPTION
		REVISIONS
SHEET ISSUE:		DESIGN DEVELOPMENT
SHEET ISSUE DATE:		08/16/2019
PROJECT NO:		—
DRAWN BY:		GC
CHECKED BY:		—

Project Status

COPYRIGHT © 2019. ALL RIGHTS RESERVED. NO PART OF THIS DOCUMENT MAY BE REPRODUCED IN ANY FORM OR BY ANY MEANS WITHOUT PERMISSION FROM WALKER CONSULTANTS.

SHEET TITLE:
WALL SECTIONS WEST AND EAST ELEVATIONS

A 300

10/17/2019 9:22:47 AM C:\Users\gchapman\Documents\SLI1 PROJECTS\Mt Prospect\BIM 6\BIM CD SET 10.15.18.rvt

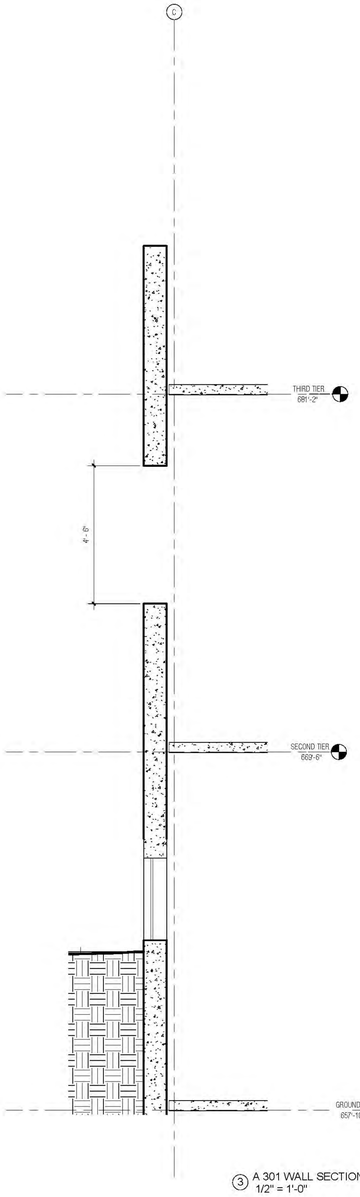

3 A 301 WALL SECTION AT OPENINGS
1/2" = 1'-0"

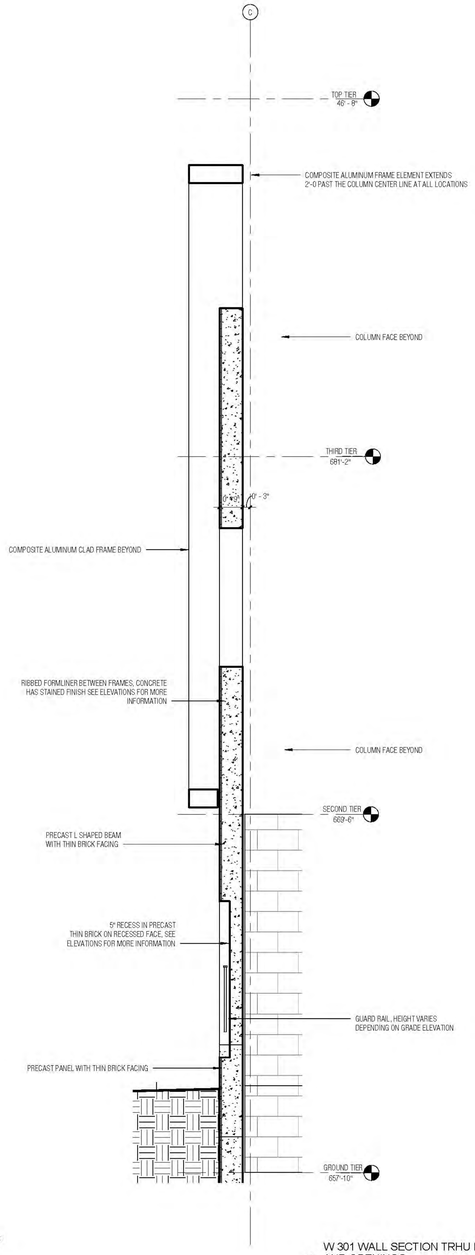

2 W 301 WALL SECTION TRHU FRAME AND OPENINGS
1/2" = 1'-0"

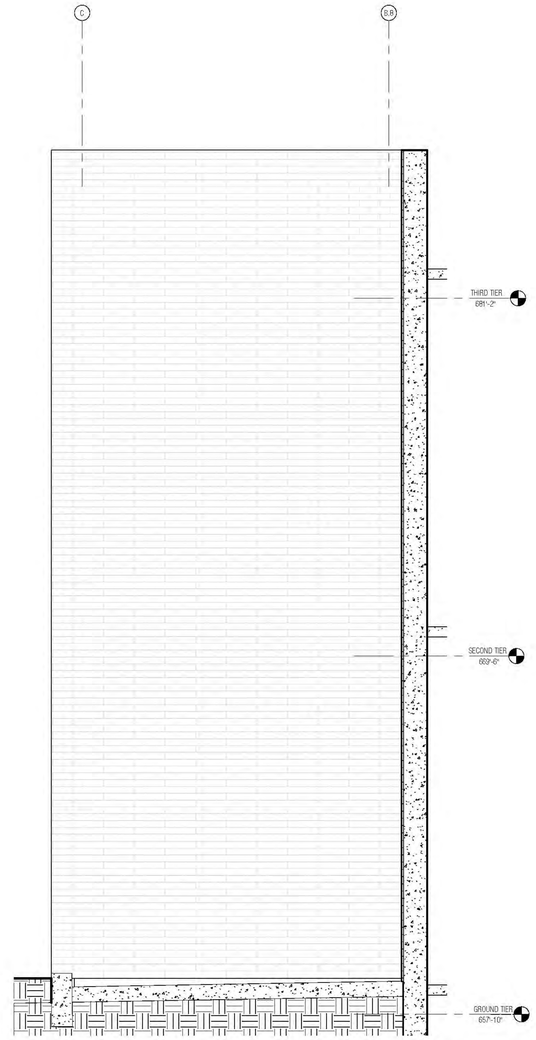

1 A 301 WALL SECTION AT SNOW CHUTE
1/2" = 1'-0"

PRIME DESIGNER

WALKER CONSULTANTS

2895 Greenspoint Parkway, Suite 600
Hoffman Estates IL 60169
847.697.2640 Ph
www.walkerconsultants.com

ARCHITECTURAL

Studio Level 1

STUDIO LEVEL 1
1001 North Warren Street
Gary, IN 46403
219.951.0214 Ph
www.studiolevel1.com

Mount Prospect

Maple Street Parking Deck

MOUNT PROSPECT, IL

MARK	DATE	DESCRIPTION
		REVISIONS
SHEET ISSUE:		DESIGN DEVELOPMENT
SHEET ISSUE DATE:		08/16/2019
PROJECT NO:		---
DRAWN BY:		GC
CHECKED BY:		---

COPYRIGHT © 2019. ALL RIGHTS RESERVED. NO PART OF THIS DOCUMENT MAY BE REPRODUCED IN ANY FORM OR BY ANY MEANS WITHOUT PERMISSION FROM WALKER CONSULTANTS.

SHEET TITLE:
WALL SECTIONS SOUTH ELEVATION

A 301

Project Status

10/17/2019 9:22:56 AM C:\Users\jchapman\Documents\SL1 PROJECTS\Mt Prospect\BIM 6\BIM CD SET 10.15.19.rvt

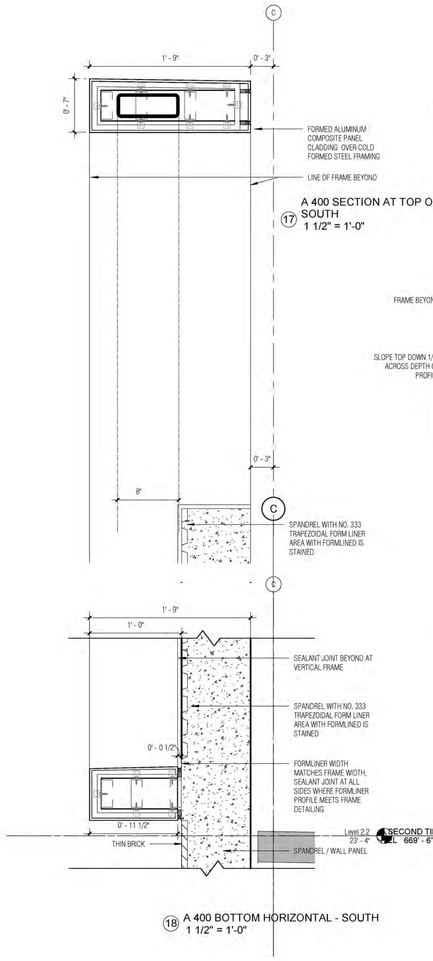

17 A 400 SECTION AT TOP OF FRAME / SOUTH
1 1/2" = 1'-0"

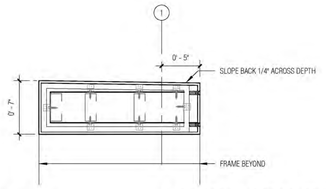

15 A 400 SECTION AT TOP OF FRAME / WEST
1 1/2" = 1'-0"

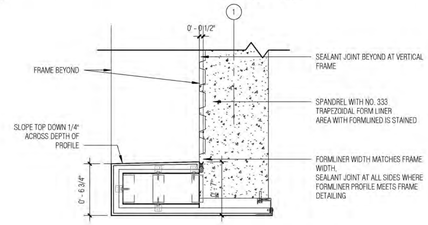

16 A 400 BOTTOM HORIZONTAL WEST ELEVATION
1 1/2" = 1'-0"

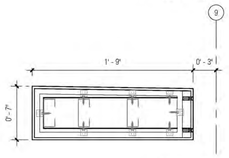

19 A 400 SECTION AT TOP OF FRAME / EAST
1 1/2" = 1'-0"

18 A 400 BOTTOM HORIZONTAL - SOUTH
1 1/2" = 1'-0"

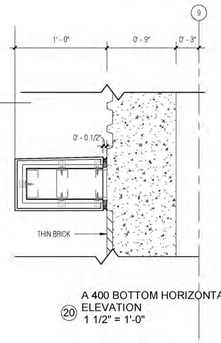

20 A 400 BOTTOM HORIZONTAL EAST ELEVATION
1 1/2" = 1'-0"

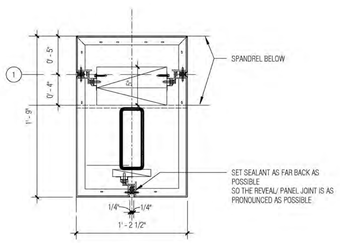

13 A 400 INTERMEDIATE VERTICAL
1 1/2" = 1'-0"

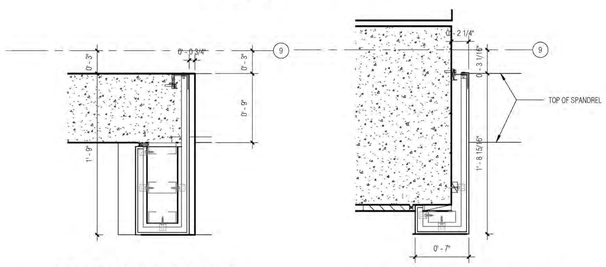

12 A 400 END VERTICAL SPANDREL IN SAME PLANE - EAST ELEVATION
1 1/2" = 1'-0"

11 A 400 END VERTICAL EAST ELEVATION AT ENTRANCE
1 1/2" = 1'-0"

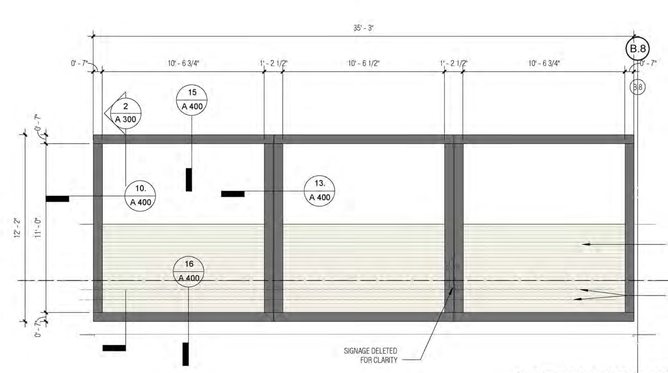

2 A 400 WEST ELEVATION- FRAME DETAIL ELEVATION
1/4" = 1'-0"

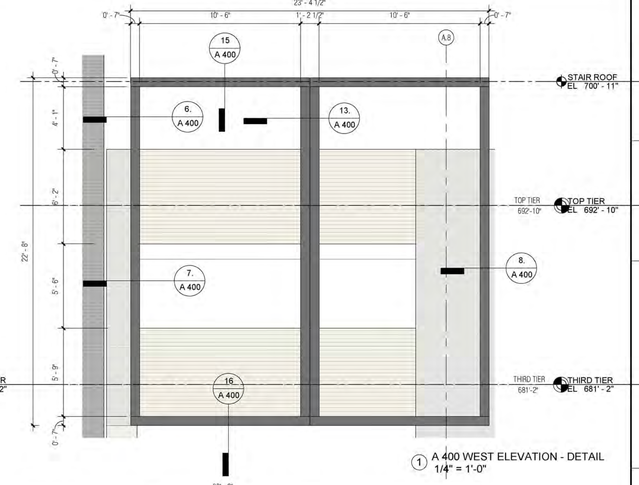

1 A 400 WEST ELEVATION - DETAIL
1/4" = 1'-0"

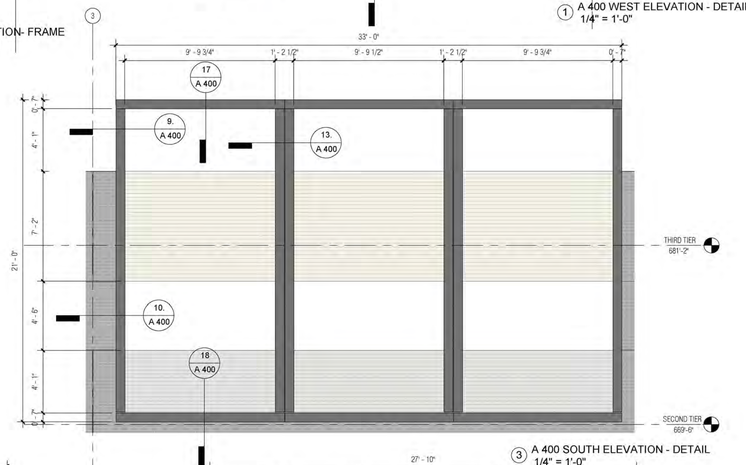

3 A 400 SOUTH ELEVATION - DETAIL
1/4" = 1'-0"

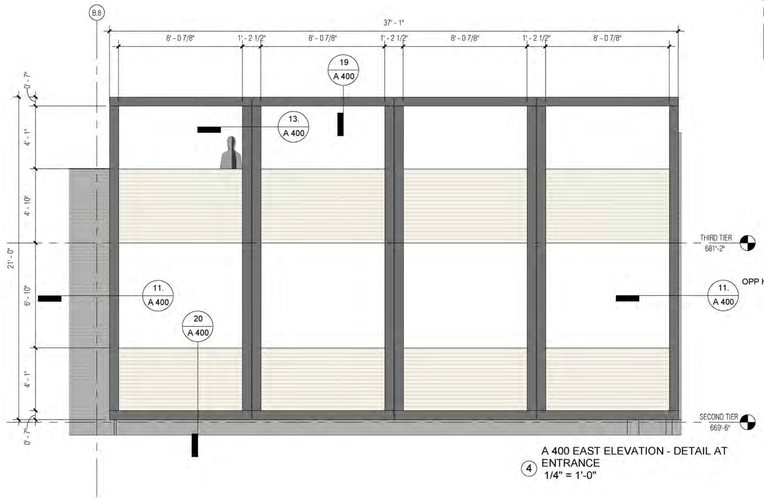

4 A 400 EAST ELEVATION - DETAIL AT ENTRANCE
1/4" = 1'-0"

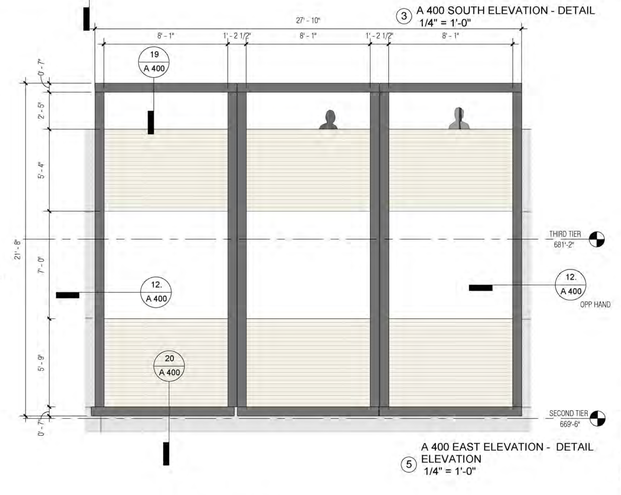

5 A 400 EAST ELEVATION - DETAIL ELEVATION
1/4" = 1'-0"

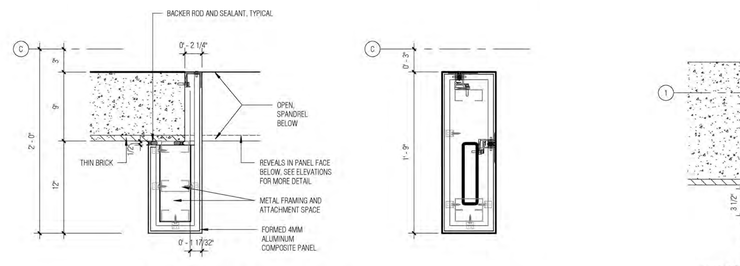

10 A 400 END VERTICAL PANEL/ SPANDREL IN SAME PLANE
1 1/2" = 1'-0"

9 Detail 8
1 1/2" = 1'-0"

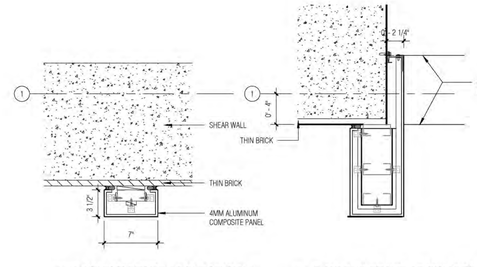

8 A 400 END FRAME AT SHEAR WALL
1 1/2" = 1'-0"

7 A 400 END FRAME AT COLUMN
1 1/2" = 1'-0"

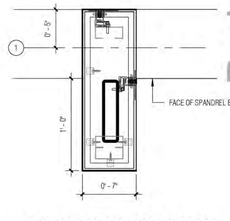

6 A 400 END FRAME ABOVE SPANDREL - WEST
1 1/2" = 1'-0"

PRIME DESIGNER
WALKER CONSULTANTS
2895 Greenspoint Parkway, Suite 600
Hoffman Estates IL 60169
847.697.2640 Ph
www.walkerconsultants.com

ARCHITECTURAL
Studio Level 1
STUDIO LEVEL 1
1001 North Warren Street
Gary, IN 46403
219.951.0214 Ph
www.studiolevel1.com

Mount Prospect

Maple Street Parking Deck

MOUNT PROSPECT, IL

MARK	DATE	DESCRIPTION
1	07/24/2019	SCHEMATIC DESIGN PACKAGE

REVISIONS

SHEET ISSUE:	DESIGN DEVELOPMENT
SHEET ISSUE DATE:	08/16/2019
PROJECT NO:	---
DRAWN BY:	GC
CHECKED BY:	---

Project Status

COPYRIGHT © 2019. ALL RIGHTS RESERVED. NO PART OF THIS DOCUMENT MAY BE REPRODUCED IN ANY FORM OR BY ANY MEANS WITHOUT PERMISSION FROM WALKER CONSULTANTS.

SHEET TITLE:
METAL DETAILING

A 400

10/17/2019 9:23:11 AM C:\Users\gchapman\Documents\SL1 PROJECTS\Mt. Prospect\BIM 6\BIM CD SET 10.15.19.rvt

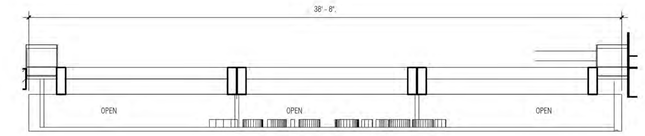

1 A 401 WEST CANOPY PLAN
1/4" = 1'-0"

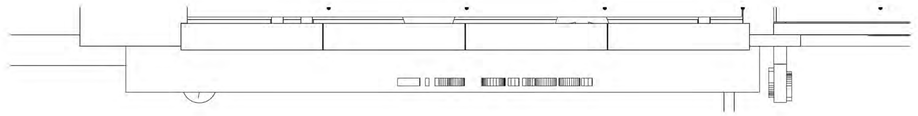

3 A 401 EAST CANOPY PLAN
1/4" = 1'-0"

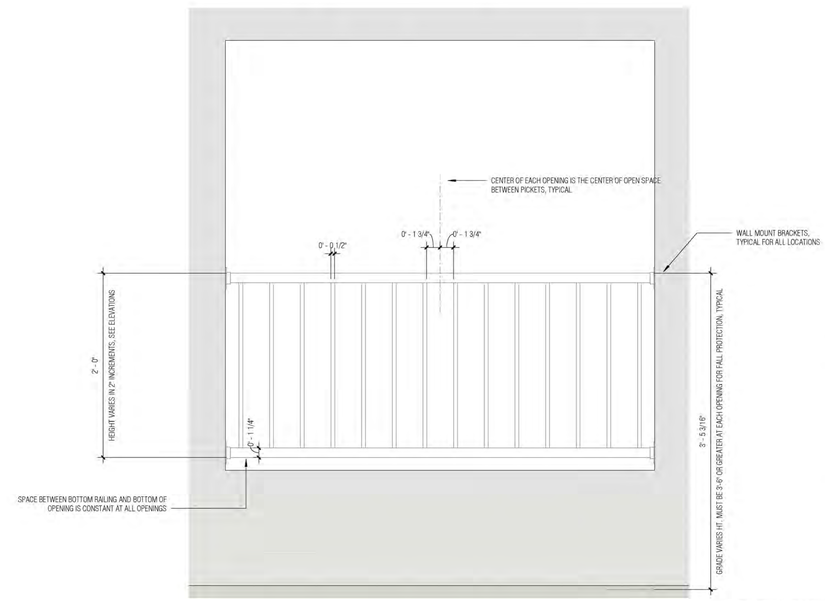

4 RAILING DETAIL
1 1/2" = 1'-0"

Project Status

PRIME DESIGNER

WALKER CONSULTANTS

2895 Greenspoint Parkway, Suite 600
Hoffman Estates IL 60169
847.697.2640 Ph
www.walkerconsultants.com

ARCHITECTURAL

Studio Level 1

STUDIO LEVEL 1
1001 North Warren Street
Gary, IN 46403
219.951.0214 Ph
www.studiolevel1.com

Mount Prospect

Maple Street Parking Deck

MOUNT PROSPECT, IL

MARK	DATE	DESCRIPTION
		REVISIONS

SHEET ISSUE:	DESIGN DEVELOPMENT
SHEET ISSUE DATE:	08/16/2019
PROJECT NO.:	---
DRAWN BY:	GC
CHECKED BY:	---

COPYRIGHT © 2019. ALL RIGHTS RESERVED. NO PART OF THIS DOCUMENT MAY BE REPRODUCED IN ANY FORM OR BY ANY MEANS WITHOUT PERMISSION FROM WALKER CONSULTANTS.

SHEET TITLE:
CANOPY DETALS

A 401

10/17/2019 9:31:30 AM C:\Users\gchapman\Documents\SL1 PROJECTS\Mt Prospect\BIM 6\BIM CD SET 10.15.19.rvt

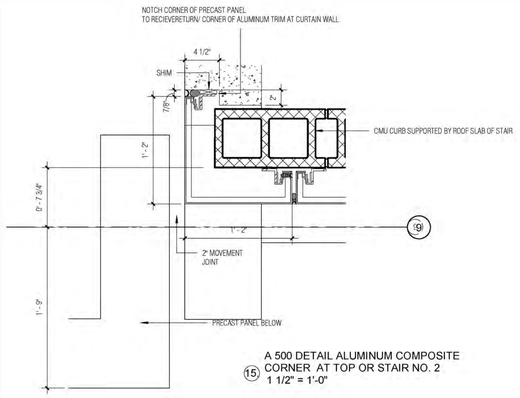

15 A 500 DETAIL ALUMINUM COMPOSITE CORNER AT TOP OR STAIR NO. 2
1 1/2" = 1'-0"

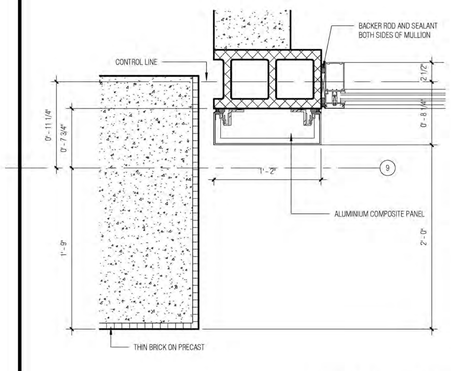

14 A 500 STAIR NO.2 JAMB DETAIL - SOUTH
1 1/2" = 1'-0"

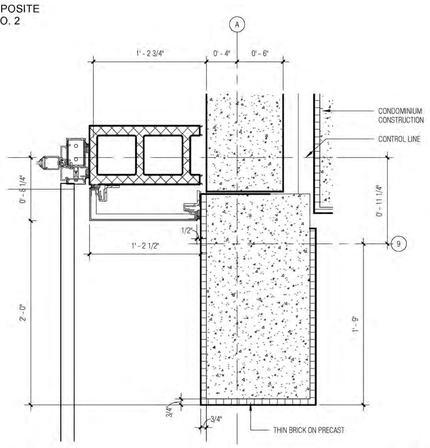

13 A 500 STAIR NO.2 JAMB DETAIL @ DOOR
1 1/2" = 1'-0"

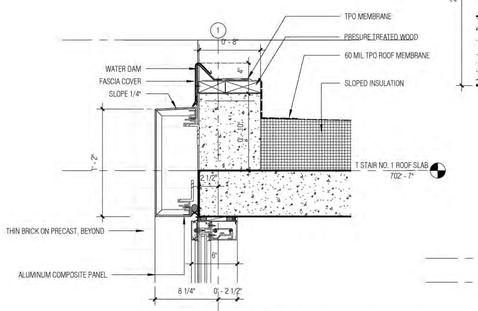

10 A 500 ROOF EDGE AT GLASSWALL
1 1/2" = 1'-0"

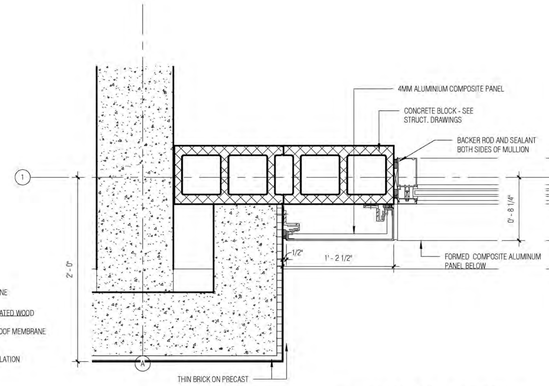

4 A 500 STAIR NO. 1 JAMB DETAIL
1 1/2" = 1'-0"

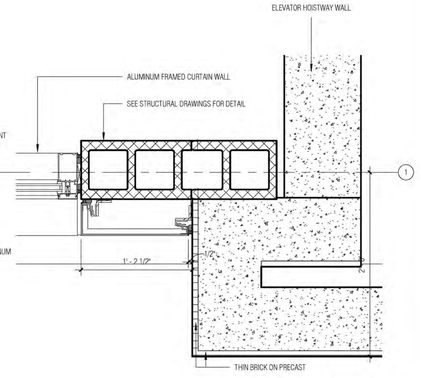

3 A 500 JAMD DETAIL HOISTWAY
1 1/2" = 1'-0"

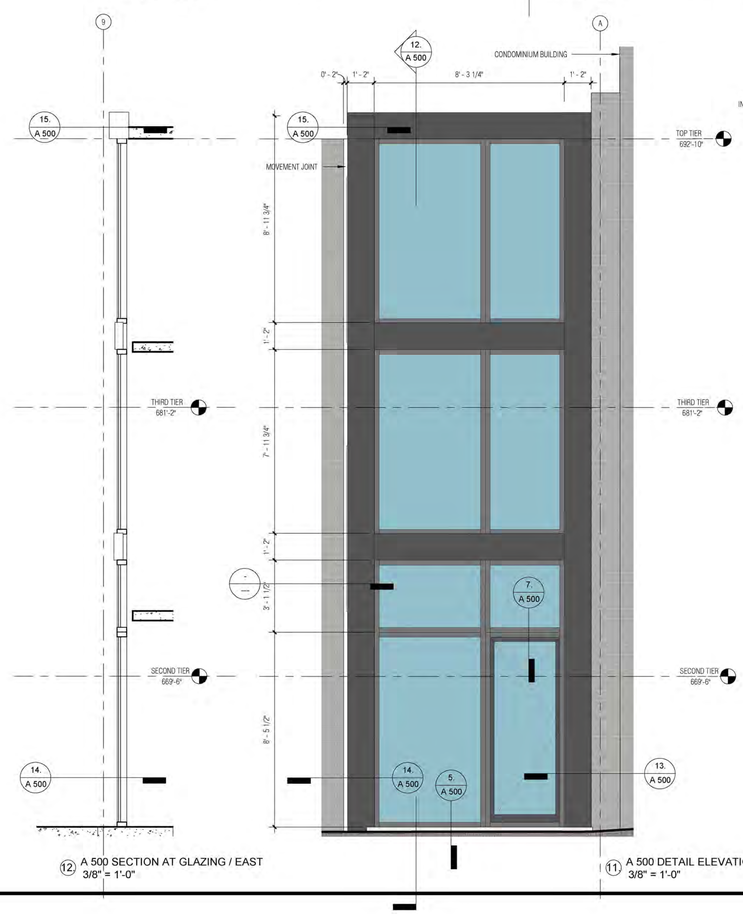

12 A 500 SECTION AT GLAZING / EAST
3/8" = 1'-0"

11 A 500 DETAIL ELEVATION - EAST
3/8" = 1'-0"

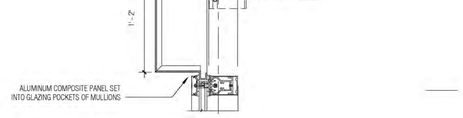

9 A 500 DETAIL AT INFILL PANEL TOP TIER
1 1/2" = 1'-0"

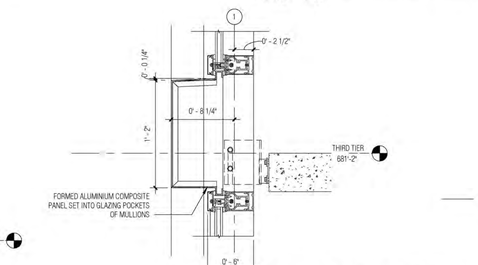

8 A 500 DETAIL AT INFILL PANEL THIRD TIER
1 1/2" = 1'-0"

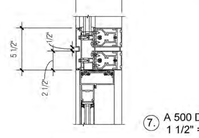

7 A 500 DOOR HEAD DETAIL
1 1/2" = 1'-0"

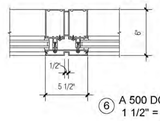

6 A 500 DOUBLE MULLION DETAIL
1 1/2" = 1'-0"

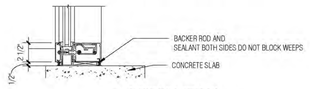

5 A 500 SILL DETAIL
1 1/2" = 1'-0"

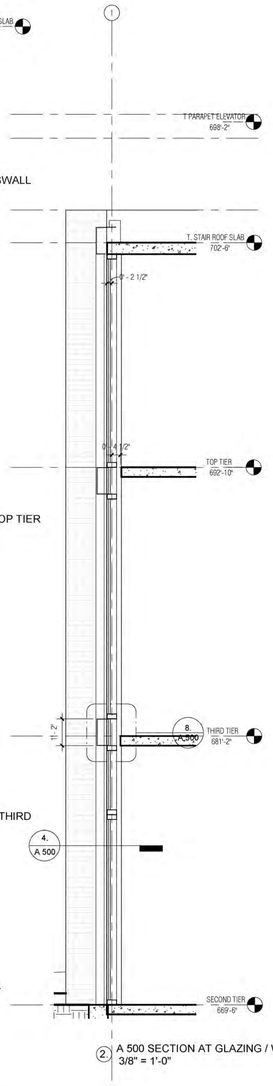

2 A 500 SECTION AT GLAZING / WEST
3/8" = 1'-0"

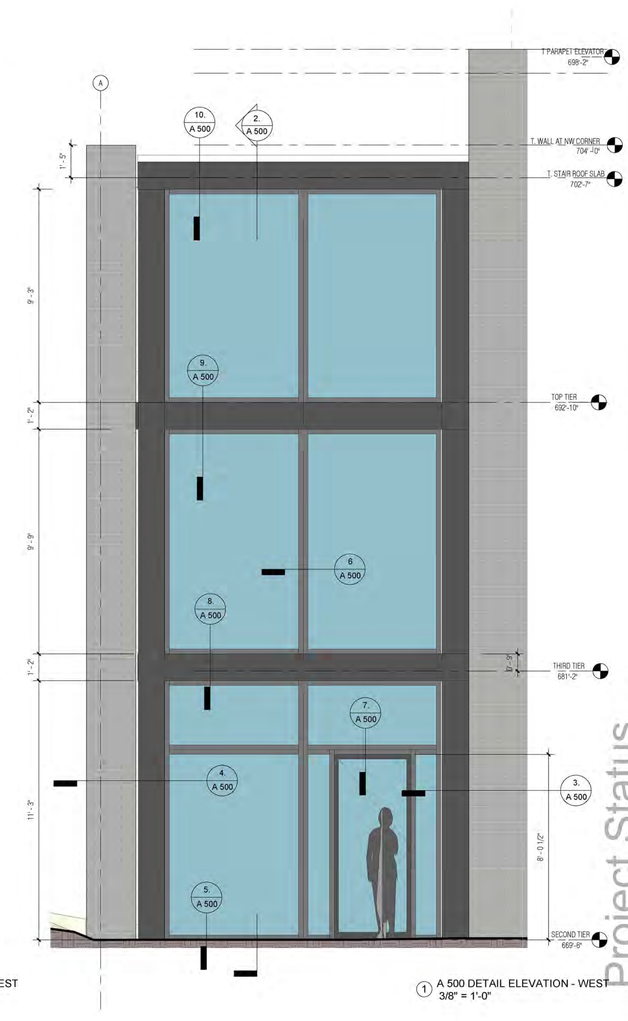

1 A 500 DETAIL ELEVATION - WEST
3/8" = 1'-0"

PRIME DESIGNER

WALKER CONSULTANTS

2895 Greenspoint Parkway, Suite 600
Hoffman Estates IL 60169
847.697.2640 Ph
www.walkerconsultants.com

ARCHITECTURAL

Studio Level 1

STUDIO LEVEL 1
1001 North Warren Street
Gary, IN 46403
219.951.0214 Ph
www.studiolevel1.com

Mount Prospect

Maple Street Parking Deck

MOUNT PROSPECT, IL

MARK	DATE	DESCRIPTION
REVISIONS		

SHEET ISSUE:	DESIGN DEVELOPMENT
SHEET ISSUE DATE:	08/16/2019
PROJECT NO:	---
DRAWN BY:	GC
CHECKED BY:	---

COPYRIGHT © 2019. ALL RIGHTS RESERVED. NO PART OF THIS DOCUMENT MAY BE REPRODUCED IN ANY FORM OR BY ANY MEANS WITHOUT PERMISSION FROM WALKER CONSULTANTS.

SHEET TITLE:
GLAZING SYSTEM DETAILS

Project Status

A 500

10/17/2019 9:23:42 AM C:\Users\gchapman\Documents\SL1 PROJECTS\Mt Prospect\BIM 6\BIM CD SET 10.15.19.rvt

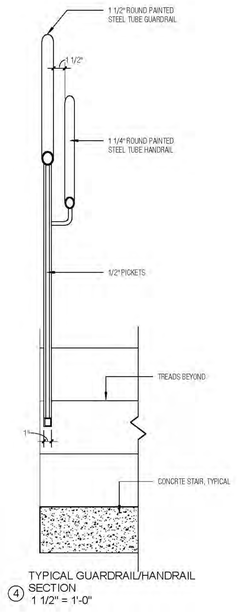

4 TYPICAL GUARDRAIL/HANDRAIL SECTION
1 1/2" = 1'-0"

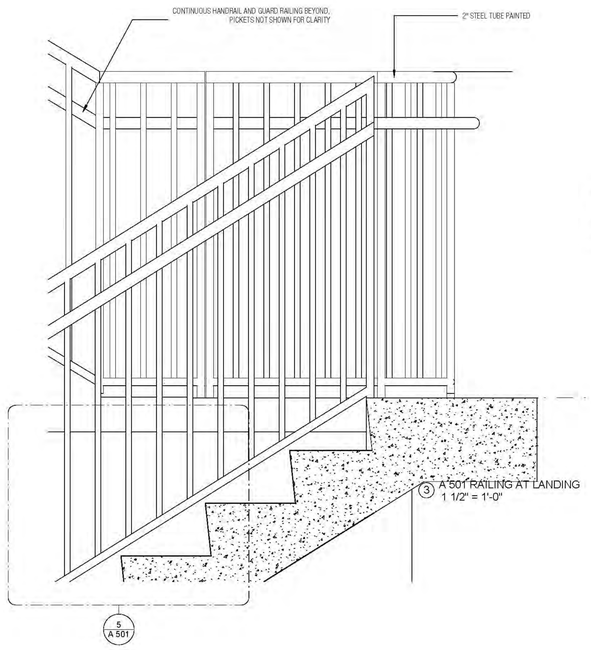

3 A 501 RAILING AT LANDING
1 1/2" = 1'-0"

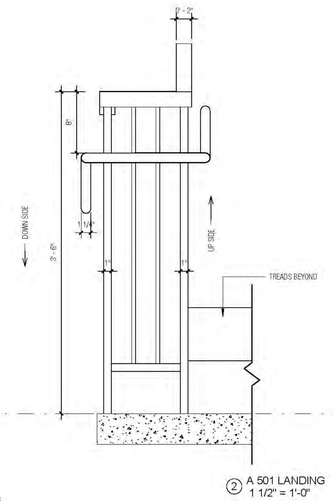

2 A 501 LANDING
1 1/2" = 1'-0"

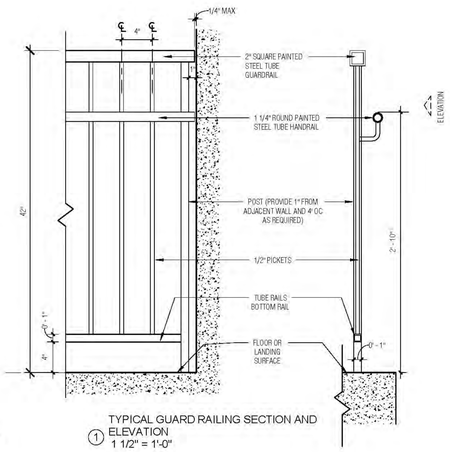

1 TYPICAL GUARD RAILING SECTION AND ELEVATION
1 1/2" = 1'-0"

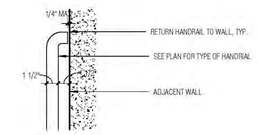

6 HANDRAIL RETURN TO WALL
1 1/2" = 1'-0"

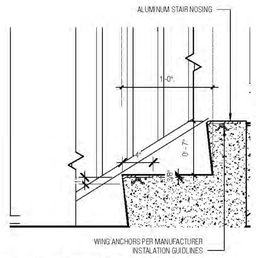

5 A 501 STAIR NOSING DETAIL
1 1/2" = 1'-0"

PRIME DESIGNER

WALKER CONSULTANTS

2895 Greenspoint Parkway, Suite 600
Hoffman Estates IL 60169
847.697.2640 Ph
www.walkerconsultants.com

ARCHITECTURAL

Studio Level 1

STUDIO LEVEL 1
1001 North Warren Street
Gary, IN 46403
219.951.0214 Ph
www.studiolevel1.com

Mount Prospect

Maple Street Parking Deck

MOUNT PROSPECT, IL

MARK	DATE	DESCRIPTION
		REVISIONS
SHEET ISSUE:		DESIGN DEVELOPMENT
SHEET ISSUE DATE:		08/16/2019
PROJECT NO:		—
DRAWN BY:		GC
CHECKED BY:		—

Project Status

COPYRIGHT © 2019. ALL RIGHTS RESERVED. NO PART OF THIS DOCUMENT MAY BE REPRODUCED IN ANY FORM OR BY ANY MEANS WITHOUT PERMISSION FROM WALKER CONSULTANTS.

SHEET TITLE:
STAIR DETAILS

A 501

10/17/2019 9:23:53 AM C:\Users\gchapman\Documents\SLI1 PROJECTS\Mt Prospect\BIM R&BM CD SET 10.15.19.rvt

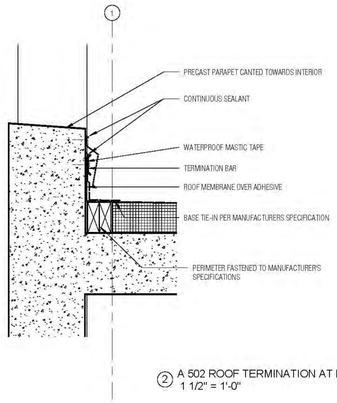

2 A 502 ROOF TERMINATION AT PARAPET
1 1/2" = 1'-0"

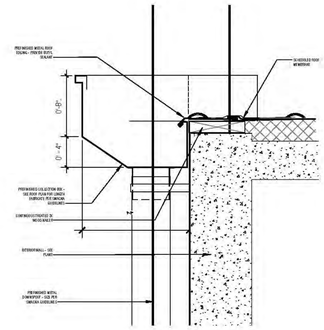

1 A 502 SECTION AT COLLECTOR HEAD
1 1/2" = 1'-0"

PRIME DESIGNER

WALKER CONSULTANTS

2895 Greenspoint Parkway, Suite 600
Hoffman Estates IL 60169
847.697.2640 Ph
www.walkerconsultants.com

ARCHITECTURAL

Studio Level 1

STUDIO LEVEL 1
1001 North Warren Street
Gary, IN 46403
219.951.0214 Ph
www.studiolevel1.com

Mount Prospect

Maple Street Parking Deck

MOUNT PROSPECT, IL

MARK	DATE	DESCRIPTION
		REVISIONS

SHEET ISSUE:	DESIGN DEVELOPMENT
SHEET ISSUE DATE:	08/16/2019
PROJECT NO:	—
DRAWN BY:	GC
CHECKED BY:	—

COPYRIGHT © 2019. ALL RIGHTS RESERVED. NO PART OF THIS DOCUMENT MAY BE REPRODUCED IN ANY FORM OR BY ANY MEANS WITHOUT PERMISSION FROM WALKER CONSULTANTS.

SHEET TITLE:
DETAILS

A 502

Project Status

10/17/2019 9:24:02 AM C:\Users\gchapman\Documents\SL1 PROJECTS\Mt Prospect\BIM 6\BIM CD SET 10.15.19.rvt

DOOR SCHEDULE								
NUMBER	WIDTH	HEIGHT	MATERIAL DOOR AND FRAME	FINISH	TYPE	HDWR.	RATING	COMMENTS
01	36"	84"	HOLLOW METAL / STEEL	PAINT		HW- XX	90 MIN	CMU FRAME
02	72"	84"	HOLLOW METAL / STEEL	PAINT		HW- XX	90 MIN	CMU FRAME
03	36"	84"	HOLLOW METAL / STEEL	PAINT		HW- XX	90 MIN	CMU FRAME
04	54"	84"	HOLLOW METAL / STAINLESS STEEL	BRUSHED #4	FGS	HW- XX	45 MIN	-
05	36"	84"	HOLLOW METAL / STEEL	PAINT		HW- XX	90 MIN	CMU FRAME
06	72"	84"	HOLLOW METAL / STEEL	PAINT		HW- XX	90 MIN	CMU FRAME
07	72"	84"	HOLLOW METAL / STEEL	PAINT		HW- XX	90 MIN	CMU FRAME
08	54"	84"	HOLLOW METAL / STAINLESS STEEL	BRUSHED #4	FGS	HW- XX	-	-
09	54"	84"	HOLLOW METAL / STAINLESS STEEL	BRUSHED #4	FGS	HW- XX	-	-
10	36"	96"	ALUMINUM / GLASS	-		HW- XX	-	PROVIDED WITH CURTAIN WALL
11	54"	84"	HOLLOW METAL / STAINLESS STEEL	PAINT		HW- XX	-	-
12	36"	96"	ALUMINUM / GLASS	-		HW- XX	-	PROVIDED WITH CURTAIN WALL
13	54"	84"	HOLLOW METAL / STAINLESS STEEL	BRUSHED #4	FGS	HW- XX	-	-
14	54"	84"	HOLLOW METAL / STAINLESS STEEL	BRUSHED #4	FGS	HW- XX	-	-
15	54"	84"	HOLLOW METAL / STAINLESS STEEL	BRUSHED #4	FGS	HW- XX	-	-

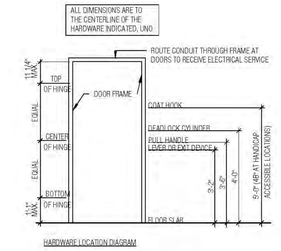

2 A 600 HARDWARE LOCATION DIAGRAM
3/8" = 1'-0"

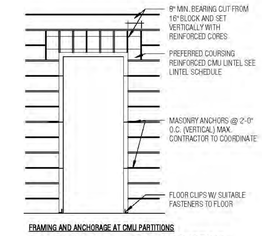

1 A 600 DOOR AND FRAME ANCHORING - CMU
3/8" = 1'-0"

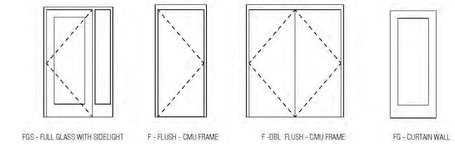

DOOR TYPES

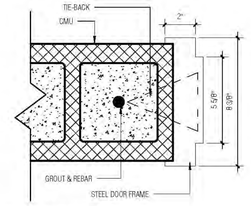

3 A 600 JAMB AT CMU PARTITION
3" = 1'-0"

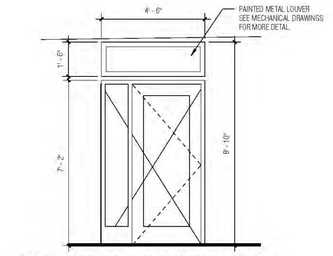

EXHUST LOUVER AT STAIRS NO. 1 AND 2 - GROUND TIER ONLY
4 3/8" = 1'-0"

Project Status

PRIME DESIGNER

WALKER CONSULTANTS

2895 Greenspoint Parkway, Suite 600
Hoffman Estates IL 60169
847.697.2640 Ph
www.walkerconsultants.com

ARCHITECTURAL

Studio Level 1

STUDIO LEVEL 1
1001 North Warren Street
Gary, IN 46403
219.951.0214 Ph
www.studiolevel1.com

Mount Prospect

Maple Street Parking Deck

MOUNT PROSPECT, IL

MARK	DATE	DESCRIPTION
		REVISIONS

SHEET ISSUE:	DESIGN DEVELOPMENT
SHEET ISSUE DATE:	08/16/2019
PROJECT NO:	—
DRAWN BY:	GC
CHECKED BY:	—

COPYRIGHT © 2019. ALL RIGHTS RESERVED. NO PART OF THIS DOCUMENT MAY BE REPRODUCED IN ANY FORM OR BY ANY MEANS WITHOUT PERMISSION FROM WALKER CONSULTANTS.

SHEET TITLE:
DOOR SCHEDULE AND DETAILS

A 600

10/17/2019 9:24:10 AM C:\Users\gchapman\Documents\SLI PROJECTS\Mt Prospect\BIM 6\BIM CD SET 10.15.19.rvt

SHEET NOTES

1. >——<- INDICATES PLAN MATCH LINES.
2. FOR FLOOR ELEVATIONS, SEE STRUCTURAL "S-100" SERIES DRAWINGS.
3. FOR EXTERIOR SIDEWALKS, CURB CUTS, ETC, SEE CIVIL SHEETS.
4. AG SHEETS ARE FOR STRIPING AND SIGNAGE ONLY. SEE ARCHITECTURAL DRAWINGS (A-SERIES) FOR ALL OTHER ITEMS.
5. "VAN" AND "EV" TEXT IS FOR REFERENCE ONLY, NOT TO BE PAINTED ON FLOOR.

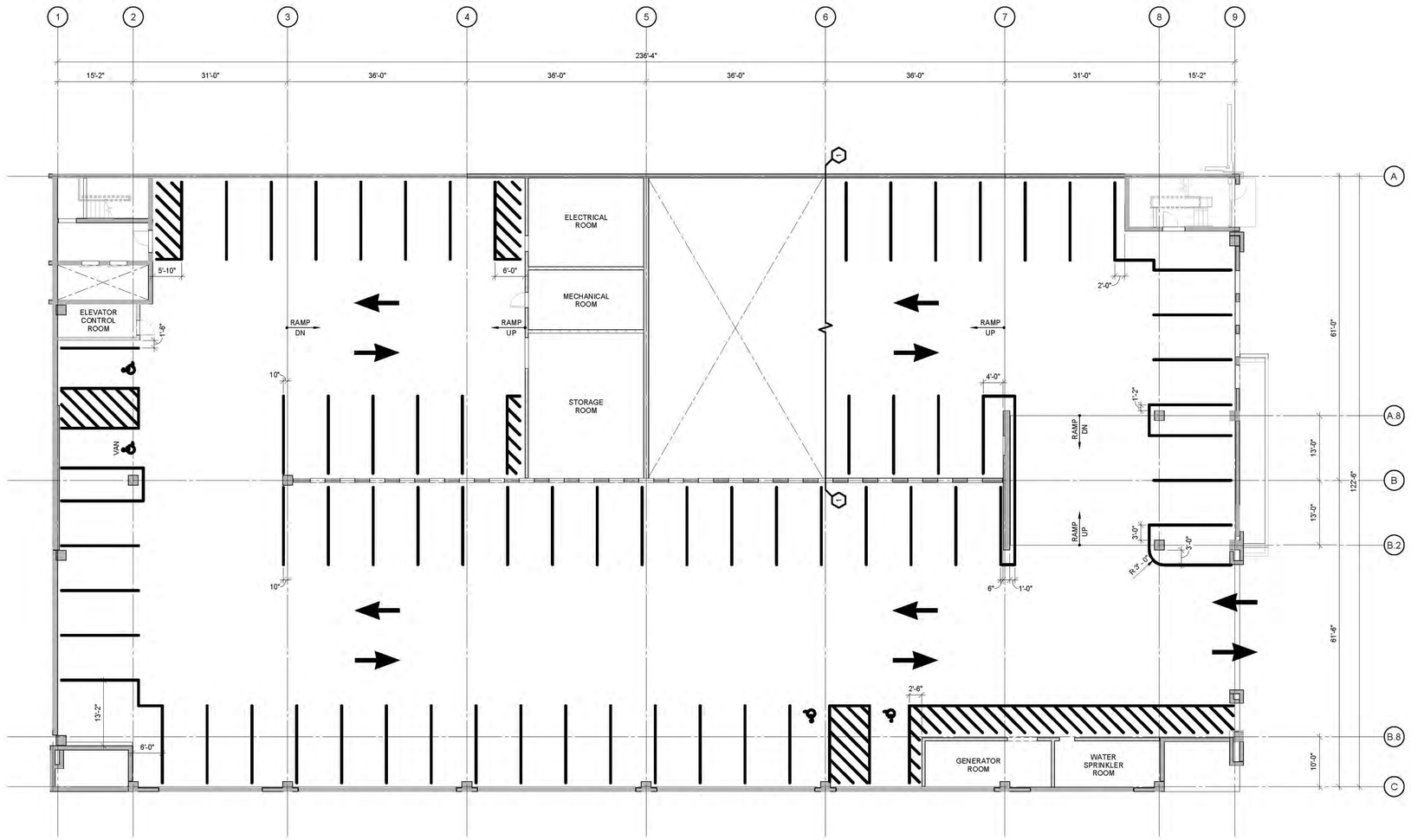

1 GROUND TIER PLAN

3/32" = 1'-0"

PARKING SCHEDULE						
TIER	STANDARD	COMPACT	ACCESSIBLE CAR	ACCESSIBLE VAN	ELECTRIC VEHICLE	TOTAL
GROUND TIER	61	0	3	1	0	65
SECOND TIER	78	0	2	1	2	83
THIRD TIER	91	0	0	0	0	91
TOP TIER	30	0	0	0	0	30
	260	0	5	2	2	269

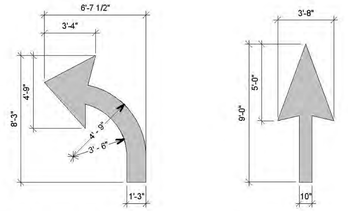

4 TYPICAL ARROW DETAIL

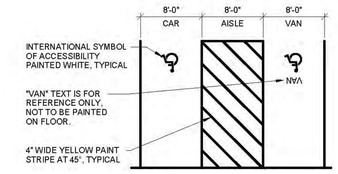

3 STRIPING DETAIL - 90º ACCESSIBLE

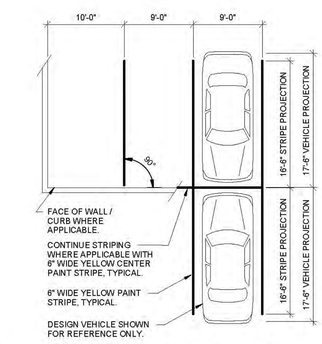

2 STRIPING DETAIL - 90º

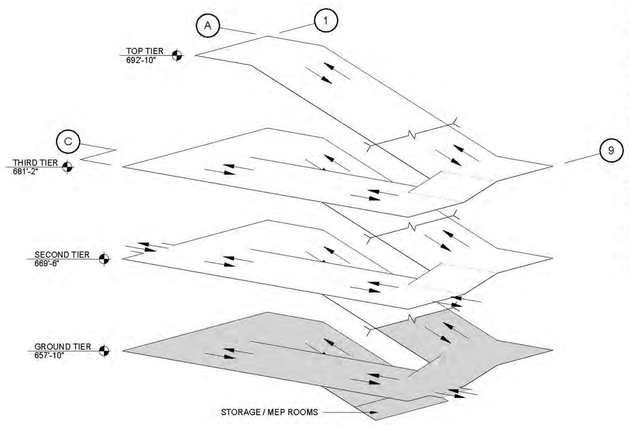

ISOMETRIC

PRELIMINARY - DO NOT USE FOR CONSTRUCTION

PRIME DESIGNER

WALKER CONSULTANTS

2895 Greenspoint Parkway, Suite 600
Hoffman Estates IL 60169
847.697.2640 Ph
www.walkerconsultants.com

ARCHITECTURAL

Studio Level 1

STUDIO LEVEL 1
1001 North Warren Street
Gary, IN 46403
219.951.0214 Ph
www.studiolevel1.com

Mount Prospect

MAPLE STREET PARKING DECK

MOUNT PROSPECT, IL

MARK	DATE	DESCRIPTION
		REVISIONS

SHEET ISSUE:	95% CONSTRUCTION DOCUMENTS
SHEET ISSUE DATE:	10/16/2019
PROJECT NO:	31-8504.00
DRAWN BY:	JVK
CHECKED BY:	DJM

COPYRIGHT © 2019. ALL RIGHTS RESERVED. NO PART OF THIS DOCUMENT MAY BE REPRODUCED IN ANY FORM OR BY ANY MEANS WITHOUT PERMISSION FROM WALKER CONSULTANTS.

SHEET TITLE:
GROUND TIER PLAN

AG101

10/17/2019 6:36:59 AM C:\Revit Projects\31-8504.00-MAPLE STREET PG-STRUCT_R19_jvkkappel.rvt

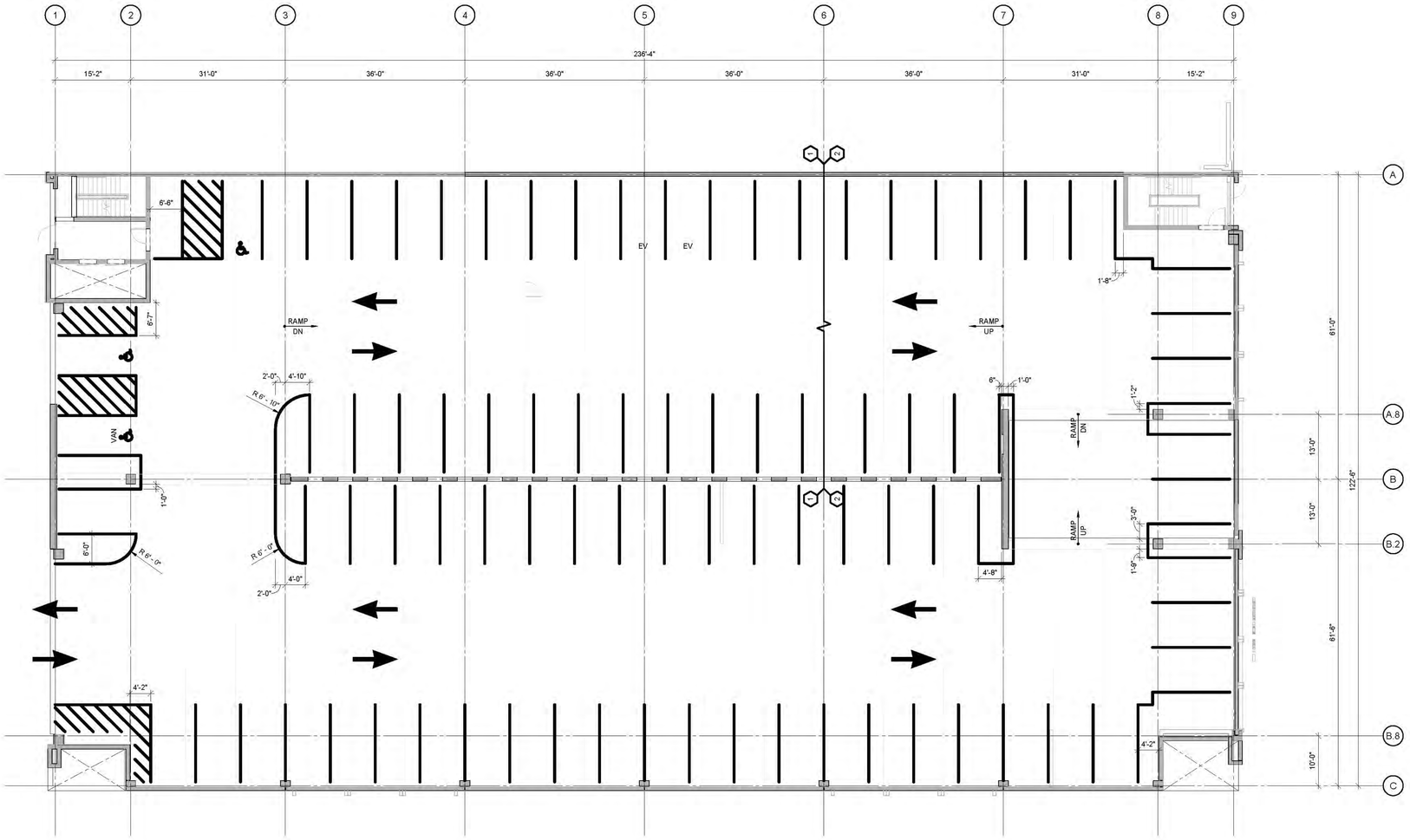

1 SECOND TIER PLAN

3/32" = 1'-0"

PARKING SCHEDULE						
TIER	STANDARD	COMPACT	ACCESSIBLE CAR	ACCESSIBLE VAN	ELECTRIC VEHICLE	TOTAL
GROUND TIER	61	0	3	1	0	65
SECOND TIER	78	0	2	1	2	83
THIRD TIER	91	0	0	0	0	91
TOP TIER	30	0	0	0	0	30
	260	0	5	2	2	269

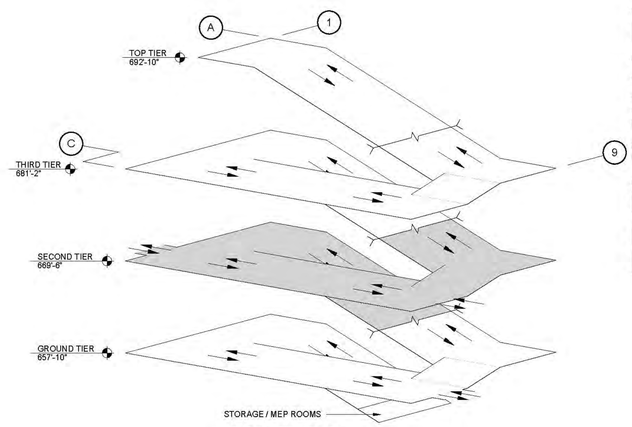

ISOMETRIC

SHEET NOTES

1. SEE SHEET AG101 FOR TYPICAL SHEET NOTES AND DETAILS.

PRIME DESIGNER

WALKER CONSULTANTS

2895 Greenspoint Parkway, Suite 600
Hoffman Estates IL 60169
847.697.2640 Ph
www.walkerconsultants.com

ARCHITECTURAL

Studio Level 1

STUDIO LEVEL 1
1001 North Warren Street
Gary, IN 46403
219.951.0214 Ph
www.studiolevel1.com

PRELIMINARY - DO NOT USE FOR CONSTRUCTION

Mount Prospect

MAPLE STREET
PARKING DECK

MOUNT PROSPECT, IL

MARK	DATE	DESCRIPTION
		REVISIONS
SHEET ISSUE:		95% CONSTRUCTION DOCUMENTS
SHEET ISSUE DATE:		10/16/2019
PROJECT NO:		31-0504.00
DRAWN BY:		JWK
CHECKED BY:		DJM

COPYRIGHT © 2019. ALL RIGHTS RESERVED. NO PART OF THIS DOCUMENT MAY BE REPRODUCED IN ANY FORM OR BY ANY MEANS WITHOUT PERMISSION FROM WALKER CONSULTANTS.

SHEET TITLE:
SECOND TIER PLAN

AG102

10/17/2019 8:37:04 AM C:\Revit Projects\31-0504.00-MAPLE STREET PG-STRUCT_R19_jwkappel.rvt

SHEET NOTES

1. SEE SHEET AG101 FOR TYPICAL SHEET NOTES AND DETAILS.

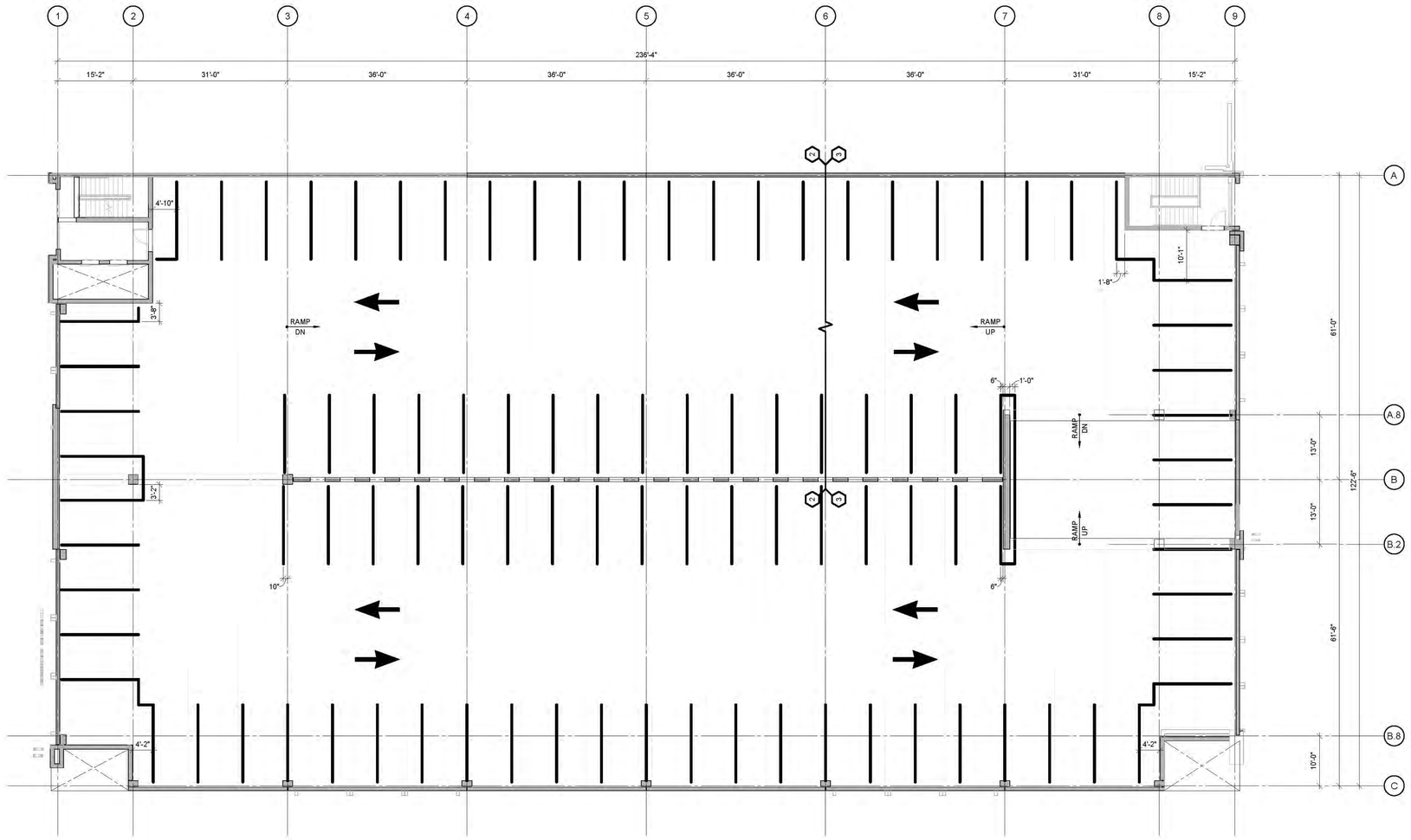

1 THIRD TIER PLAN
3/32" = 1'-0"

PARKING SCHEDULE						
TIER	STANDARD	COMPACT	ACCESSIBLE CAR	ACCESSIBLE VAN	ELECTRIC VEHICLE	TOTAL
GROUND TIER	61	0	3	1	0	65
SECOND TIER	78	0	2	1	2	83
THIRD TIER	91	0	0	0	0	91
TOP TIER	30	0	0	0	0	30
	260	0	5	2	2	269

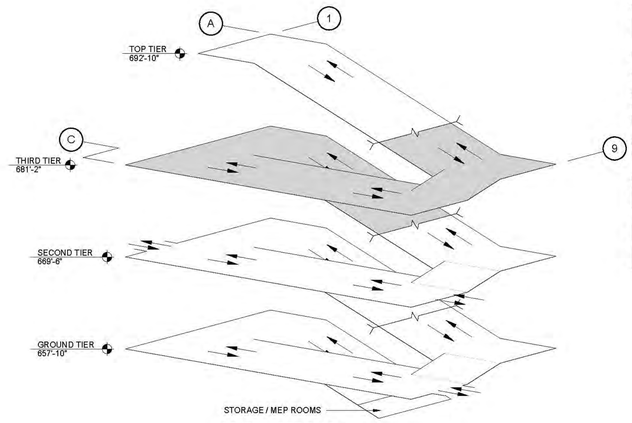

ISOMETRIC

PRELIMINARY - DO NOT USE FOR CONSTRUCTION

PRIME DESIGNER

WALKER CONSULTANTS

2885 Greenspoint Parkway, Suite 600
Hoffman Estates IL 60169
847.697.2640 Ph
www.walkerconsultants.com

ARCHITECTURAL

Studio Level 1

STUDIO LEVEL 1
1001 North Warren Street
Gary, IN 46403
219.951.0214 Ph
www.studiolevel1.com

Mount Prospect

MAPLE STREET
PARKING DECK

MOUNT PROSPECT, IL

MARK	DATE	DESCRIPTION
		REVISIONS
SHEET ISSUE:		95% CONSTRUCTION DOCUMENTS
SHEET ISSUE DATE:		10/16/2019
PROJECT NO:		31-8504.00
DRAWN BY:		JWK
CHECKED BY:		DJM

COPYRIGHT © 2019. ALL RIGHTS RESERVED. NO PART OF THIS DOCUMENT MAY BE REPRODUCED IN ANY FORM OR BY ANY MEANS WITHOUT PERMISSION FROM WALKER CONSULTANTS.

SHEET TITLE:
THIRD TIER PLAN

AG103

10/17/2019 6:37:09 AM C:\Revit Projects\31-8504.00-MAPLE STREET PG-STRUCT_R19_jwkappel.rvt

SHEET NOTES

1. SEE SHEET AG101 FOR TYPICAL SHEET NOTES AND DETAILS.

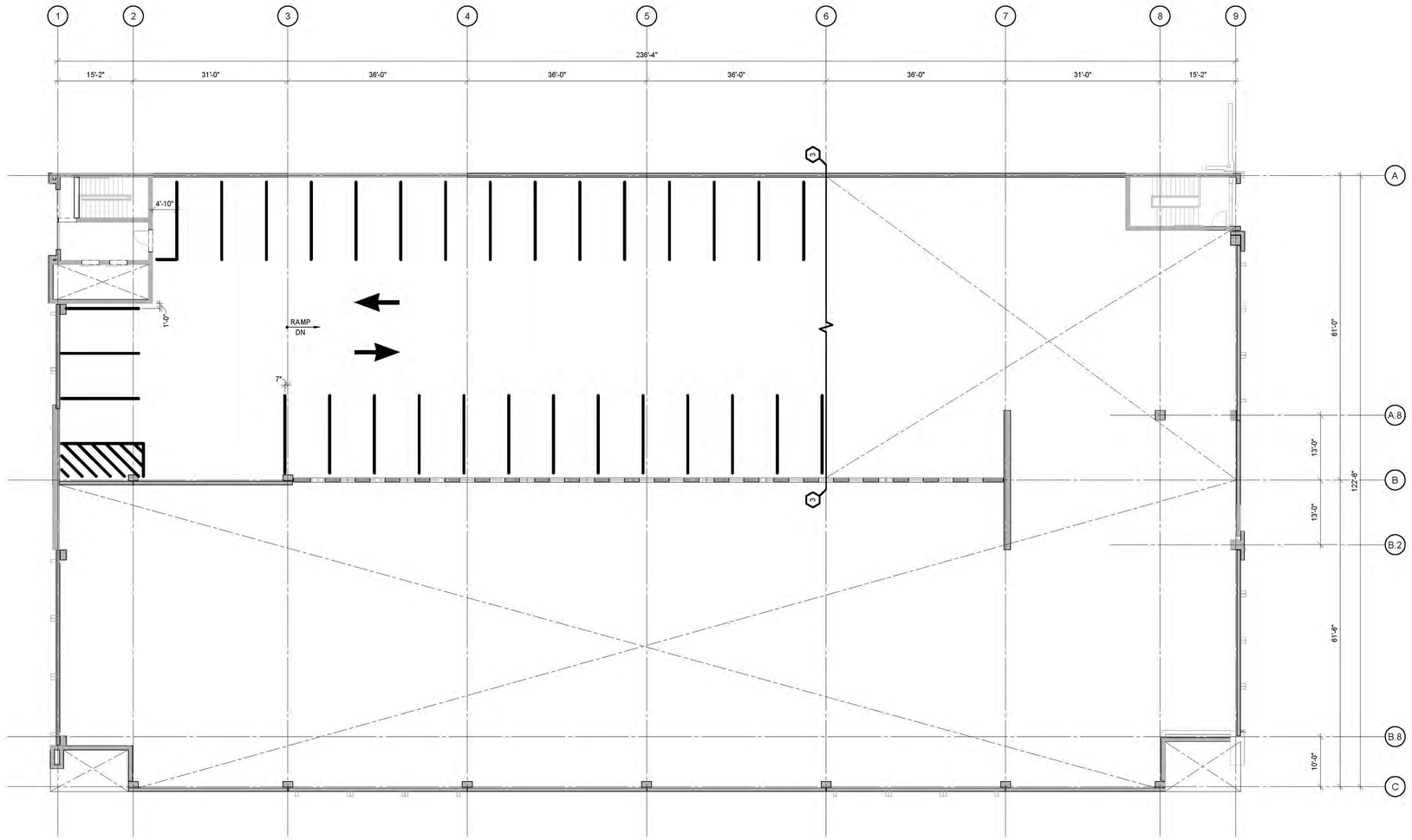

1 TOP TIER PLAN

3/32" = 1'-0"

PARKING SCHEDULE						
TIER	STANDARD	COMPACT	ACCESSIBLE CAR	ACCESSIBLE VAN	ELECTRIC VEHICLE	TOTAL
GROUND TIER	61	0	3	1	0	65
SECOND TIER	78	0	2	1	2	83
THIRD TIER	91	0	0	0	0	91
TOP TIER	30	0	0	0	0	30
	260	0	5	2	2	269

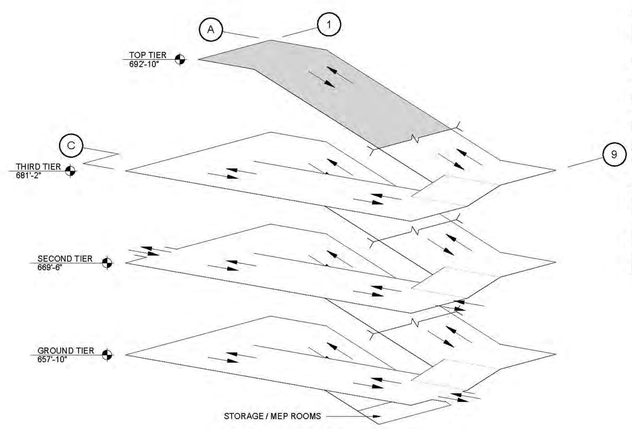

ISOMETRIC

PRELIMINARY - DO NOT USE FOR CONSTRUCTION

PRIME DESIGNER

WALKER CONSULTANTS

2885 Greenspoint Parkway, Suite 600
Hoffman Estates IL 60169
847.697.2640 Ph
www.walkerconsultants.com

ARCHITECTURAL

Studio Level 1

STUDIO LEVEL 1
1001 North Warren Street
Gary, IN 46403
219.951.0214 Ph
www.studiolevel1.com

Mount Prospect

MAPLE STREET
PARKING DECK

MOUNT PROSPECT, IL

MARK	DATE	DESCRIPTION
		REVISIONS

SHEET ISSUE:	95% CONSTRUCTION DOCUMENTS
SHEET ISSUE DATE:	10/16/2019
PROJECT NO:	31-8504.00
DRAWN BY:	JNK
CHECKED BY:	DJM

COPYRIGHT © 2019. ALL RIGHTS RESERVED. NO PART OF THIS DOCUMENT MAY BE REPRODUCED IN ANY FORM OR BY ANY MEANS WITHOUT PERMISSION FROM WALKER CONSULTANTS.

SHEET TITLE:
TOP TIER PLAN

AG104

10/17/2019 6:37:14 AM C:\Revit Projects\31-8504.00-MAPLE STREET PG-STRUCT_R19_jnkeppel.rvt

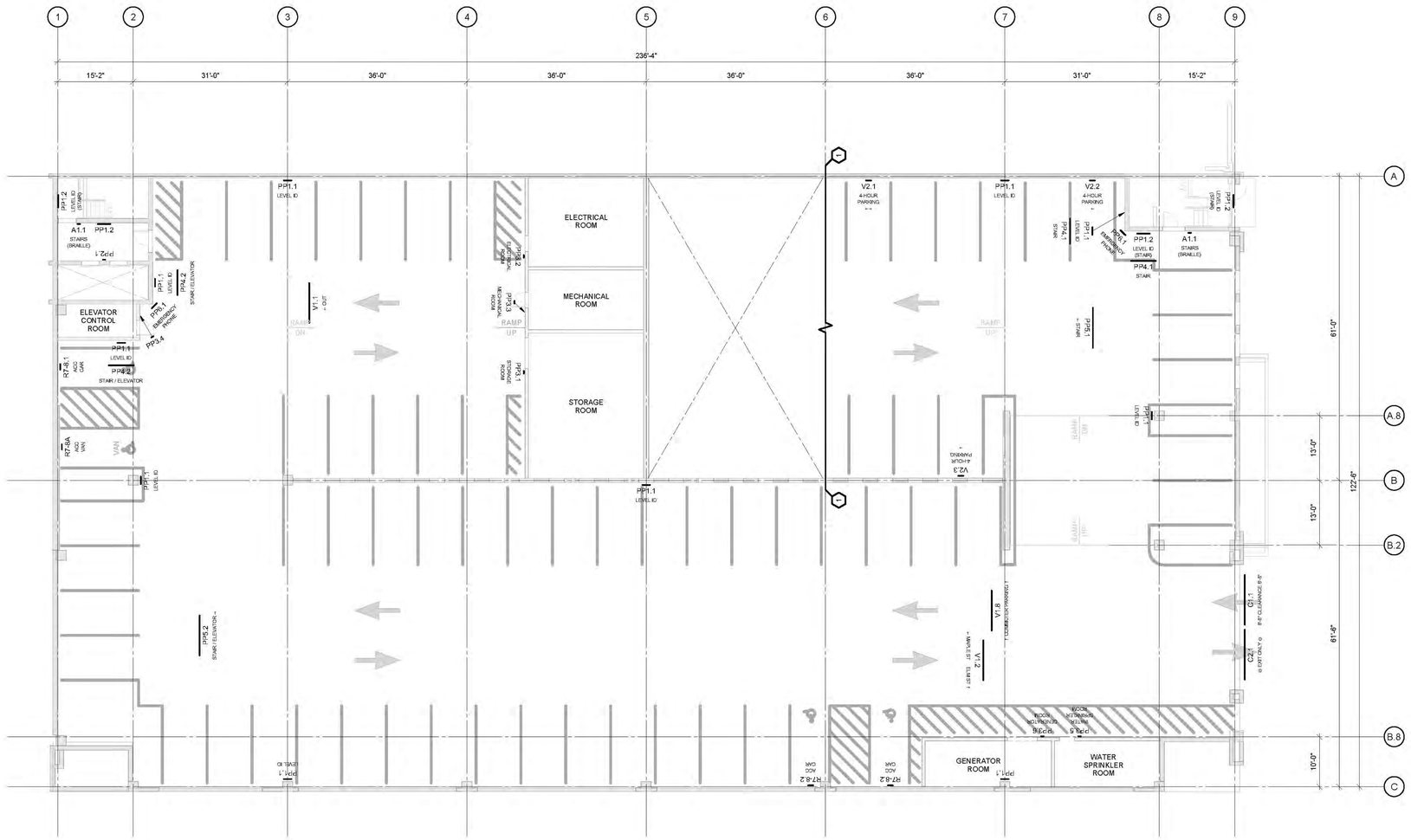

1 GROUND TIER PLAN
3/32" = 1'-0"

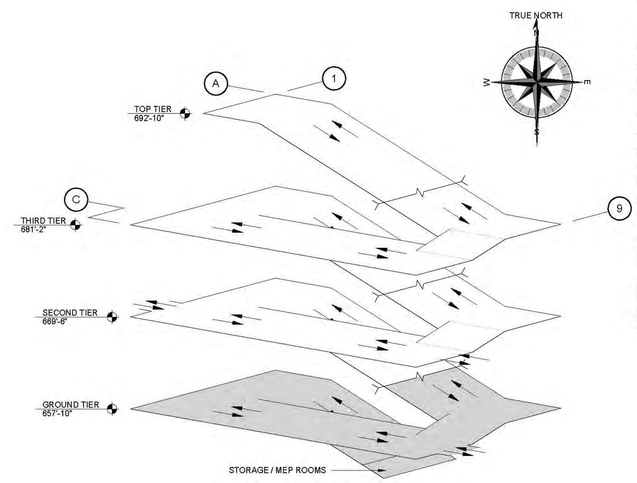

ISOMETRIC

PRELIMINARY - DO NOT USE FOR CONSTRUCTION

PRIME DESIGNER

WALKER CONSULTANTS

2885 Greenspoint Parkway, Suite 600
Hoffman Estates IL 60169
847.697.2640 Ph
www.walkerconsultants.com

ARCHITECTURAL

Studio Level 1

STUDIO LEVEL 1
1001 North Warren Street
Gary, IN 46403
219.951.0214 Ph
www.studiolevel1.com

Mount Prospect

MAPLE STREET PARKING DECK

MOUNT PROSPECT, IL

MARK	DATE	DESCRIPTION
		REVISIONS

SHEET ISSUE:	95% CONSTRUCTION DOCUMENTS
SHEET ISSUE DATE:	10/16/2019
PROJECT NO:	31-8504.00
DRAWN BY:	JVK
CHECKED BY:	DJM

COPYRIGHT © 2019. ALL RIGHTS RESERVED. NO PART OF THIS DOCUMENT MAY BE REPRODUCED IN ANY FORM OR BY ANY MEANS WITHOUT PERMISSION FROM WALKER CONSULTANTS.

SHEET TITLE:
GROUND TIER PLAN

AG201

10/17/2019 8:37:19 AM C:\Revit Projects\31-8504.00-MAPLE STREET PG-STRUCT_R19_jvkdippel.rvt

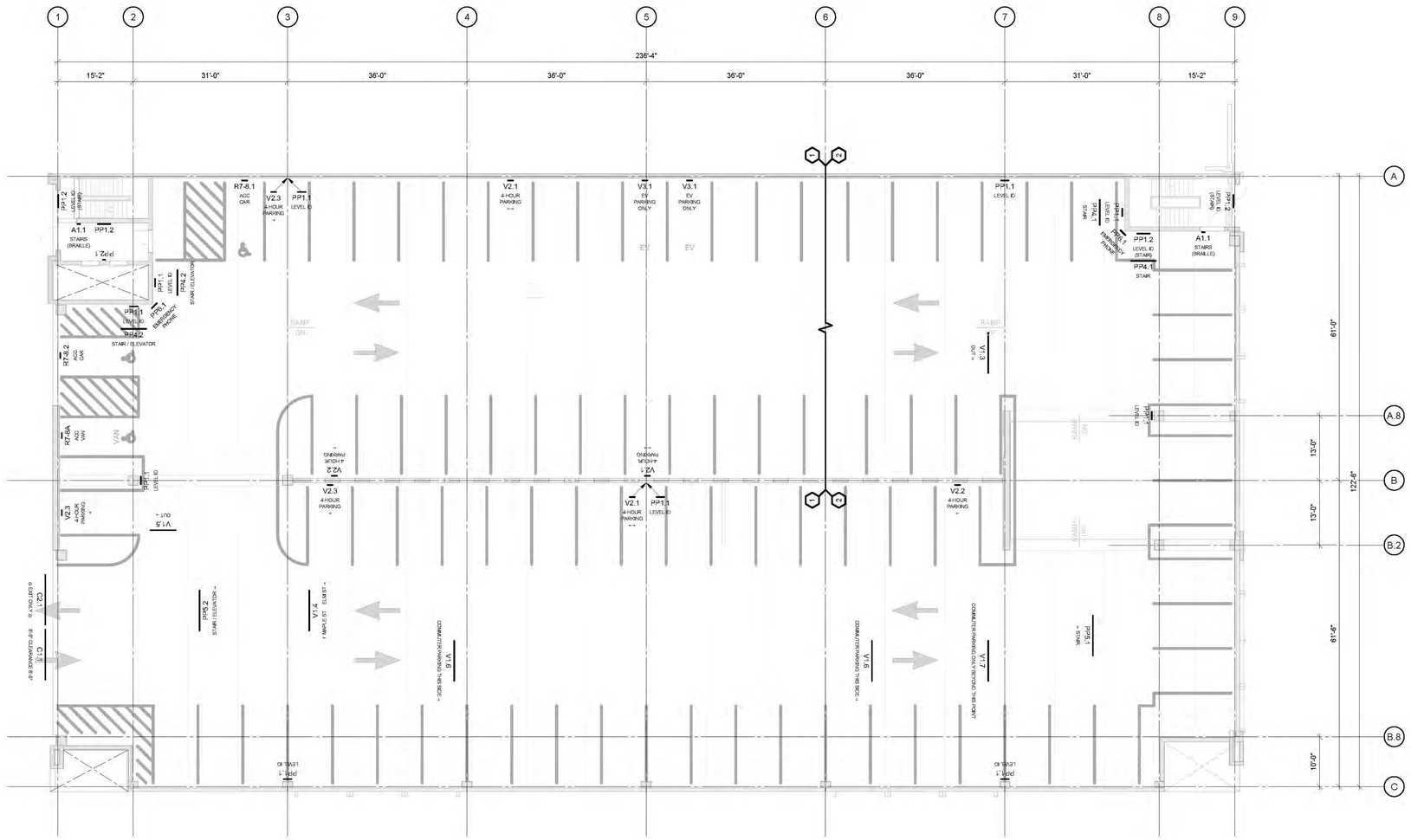

1 SECOND TIER PLAN
3/32" = 1'-0"

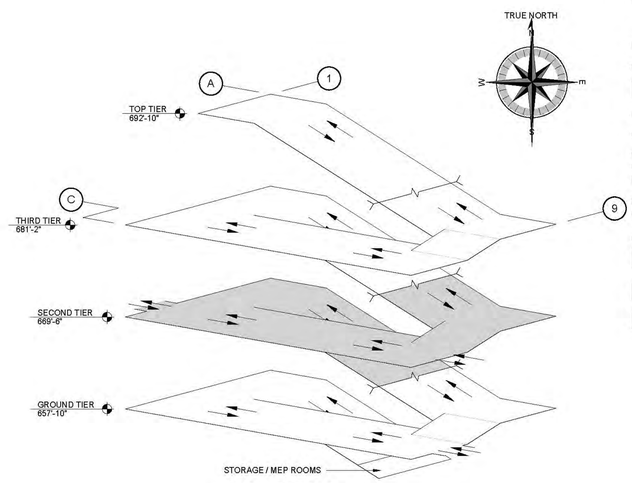

ISOMETRIC

PRELIMINARY - DO NOT USE FOR CONSTRUCTION

PRIME DESIGNER

WALKER CONSULTANTS

2895 Greenspoint Parkway, Suite 600
Hoffman Estates IL 60169
847.697.2640 Ph
www.walkerconsultants.com

ARCHITECTURAL

Studio Level 1

STUDIO LEVEL 1
1001 North Warren Street
Gary, IN 46403
219.951.0214 Ph
www.studiolevel1.com

Mount Prospect

MAPLE STREET
PARKING DECK

MOUNT PROSPECT, IL

MARK	DATE	DESCRIPTION
		REVISIONS
SHEET ISSUE:		95% CONSTRUCTION DOCUMENTS
SHEET ISSUE DATE:		10/16/2019
PROJECT NO:		31-8504.00
DRAWN BY:		JVK
CHECKED BY:		DJM

COPYRIGHT © 2019. ALL RIGHTS RESERVED. NO PART OF THIS DOCUMENT MAY BE REPRODUCED IN ANY FORM OR BY ANY MEANS WITHOUT PERMISSION FROM WALKER CONSULTANTS.

SHEET TITLE:
SECOND TIER PLAN

AG202

10/17/2019 8:37:24 AM C:\Revit Projects\31-8504.00-MAPLE STREET PG-STRUCT_R19_jvkdippel.rvt

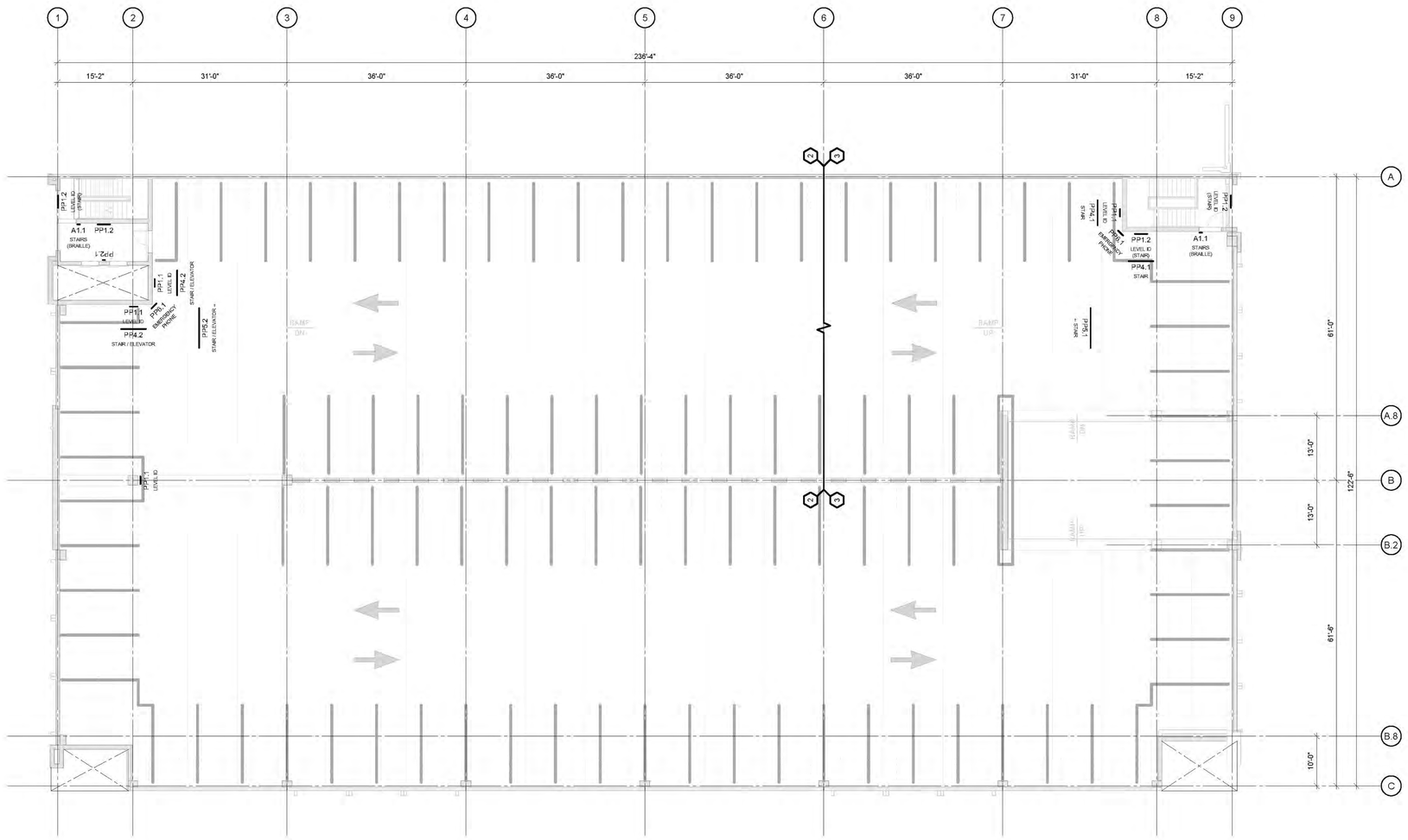

1 THIRD TIER PLAN
3/32" = 1'-0"

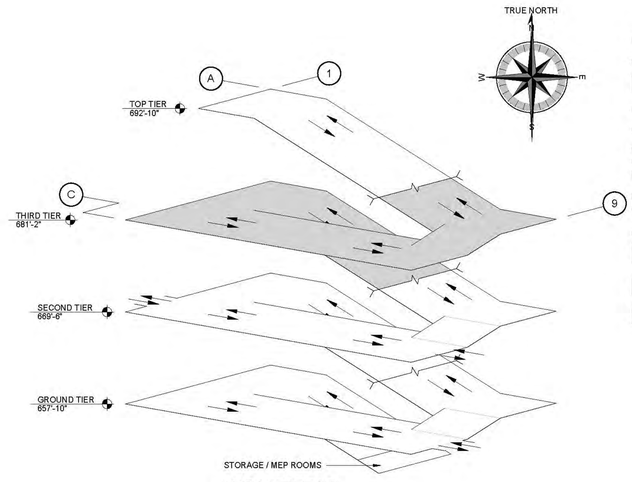

ISOMETRIC

PRELIMINARY - DO NOT USE FOR CONSTRUCTION

PRIME DESIGNER

WALKER CONSULTANTS

2885 Greenspoint Parkway, Suite 600
Hoffman Estates IL 60169
847.697.2640 Ph
www.walkerconsultants.com

ARCHITECTURAL

Studio Level 1

STUDIO LEVEL 1
1001 North Warren Street
Gary, IN 46403
219.951.0214 Ph
www.studiolevel1.com

Mount Prospect

MAPLE STREET
PARKING DECK

MOUNT PROSPECT, IL

MARK	DATE	DESCRIPTION
		REVISIONS
SHEET ISSUE:		95% CONSTRUCTION DOCUMENTS
SHEET ISSUE DATE:		10/16/2019
PROJECT NO:		31-8504.00
DRAWN BY:		JVK
CHECKED BY:		DJM

COPYRIGHT © 2019. ALL RIGHTS RESERVED. NO PART OF THIS DOCUMENT MAY BE REPRODUCED IN ANY FORM OR BY ANY MEANS WITHOUT PERMISSION FROM WALKER CONSULTANTS.

SHEET TITLE:
THIRD TIER PLAN

AG203

10/17/2019 8:37:29 AM C:\Revit Projects\31-8504.00-MAPLE STREET PG-STRUCT_R19_jvkdippel.rvt

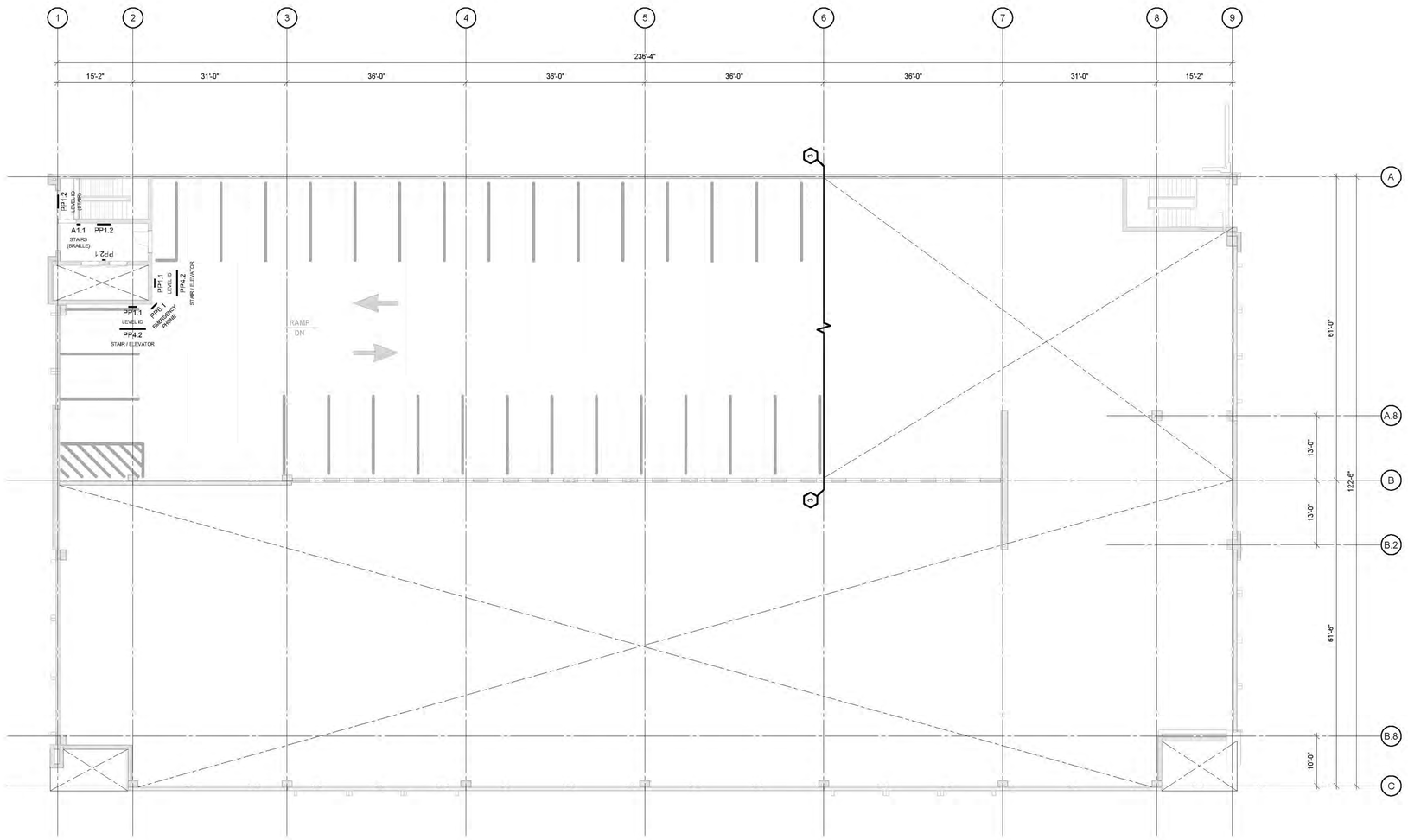

1 TOP TIER PLAN
3/32" = 1'-0"

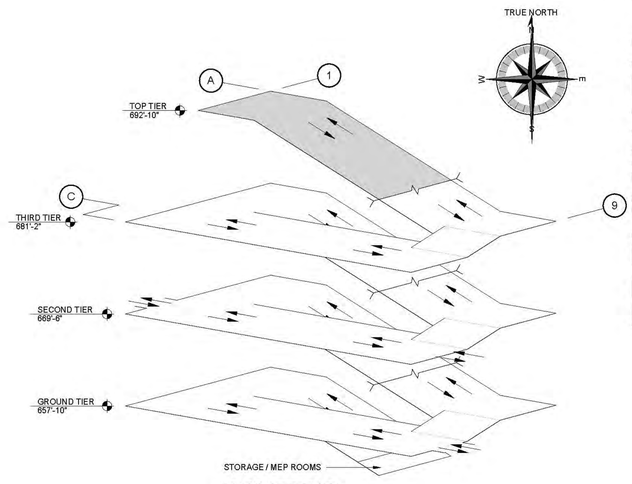

ISOMETRIC

PRELIMINARY - DO NOT USE FOR CONSTRUCTION

PRIME DESIGNER

WALKER CONSULTANTS

2885 Greenspoint Parkway, Suite 600
Hoffman Estates IL 60169
847.697.2640 Ph
www.walkerconsultants.com

ARCHITECTURAL

Studio Level 1

STUDIO LEVEL 1
1001 North Warren Street
Gary, IN 46403
219.951.0214 Ph
www.studiolevel1.com

Mount Prospect

MAPLE STREET
PARKING DECK

MOUNT PROSPECT, IL

MARK	DATE	DESCRIPTION
		REVISIONS

SHEET ISSUE:	95% CONSTRUCTION DOCUMENTS
SHEET ISSUE DATE:	10/16/2019
PROJECT NO:	31-8504.00
DRAWN BY:	JVK
CHECKED BY:	DJM

COPYRIGHT © 2019. ALL RIGHTS RESERVED. NO PART OF THIS DOCUMENT MAY BE REPRODUCED IN ANY FORM OR BY ANY MEANS WITHOUT PERMISSION FROM WALKER CONSULTANTS.

SHEET TITLE:
TOP TIER PLAN

AG204

10/17/2019 8:37:34 AM C:\Revit Projects\31-8504.00-MAPLE STREET PG-STRUCT_R19_jvkappst.rvt

SIGN SCHEDULE								
MARK	HEIGHT	LENGTH	MESSAGE	TYPE	SIGN DETAIL	MOUNTING DETAIL	MOUNTING HEIGHT	REMARKS
A1.1	4"	6"	STAIRS (BRAILLE)	A	3/AG601	2/AG701	5'-0"	
C1.1	10"	10' - 0"	8'-6" CLEARANCE 8'-6"	PVC	1/AG601	1/AG701	8'-2"	
C2.1	10"	10' - 0"	⊖ EXIT ONLY ⊖	PVC	2/AG601	1/AG701	8'-2"	
PP1.1	1' - 6"	1' - 6"	LEVEL ID	PP	4/AG601	3 & 4/AG701	NOTE 1	
PP1.2	1' - 6"	2' - 6"	LEVEL ID (STAIR)	PP	4/AG601	3 & 4/AG701	5'-0"	
PP2.1	8"	5"	IN CASE OF FIRE...	PP	5/AG601	2/AG701	5'-0"	
PP3.1	4"	6"	STORAGE ROOM	PP	3/AG601	2/AG701	5'-0"	
PP3.2	4"	6"	ELECTRICAL ROOM	PP	3/AG601	2/AG701	5'-0"	
PP3.3	4"	6"	MECHANICAL ROOM	PP	3/AG601	2/AG701	5'-0"	
PP3.4	4"	6"	ELEVATOR CONTROL ROOM	PP	3/AG601	2/AG701	5'-0"	
PP3.5	4"	6"	WATER SPRINKLER ROOM	PP	3/AG601	2/AG701	5'-0"	
PP3.6	4"	6"	GENERATOR ROOM	PP	3/AG601	2/AG701	5'-0"	
PP4.1	1' - 0"	5' - 0"	STAIR	PP	6/AG601	3 & 4/AG701	7'-0"	
PP4.2	1' - 0"	5' - 0"	STAIR / ELEVATOR	PP	6/AG601	3 & 4/AG701	7'-0"	
PP5.1	1' - 0"	8' - 0"	← STAIR	PP	6/AG601	3 & 4/AG701	8'-2"	
PP5.2	1' - 0"	8' - 0"	STAIR / ELEVATOR →	PP	6/AG601	3 & 4/AG701	8'-2"	
PP6.1	2' - 0"	1' - 6"	EMERGENCY PHONE	PP	7/AG601	5/AG701	5'-0"	
R7-8.1	1' - 6"	1' - 0"	ACCESSIBLE CAR	R	7/AG601	3 & 4/AG701	5'-0"	
R7-8.2	1' - 6"	1' - 0"	ACCESSIBLE CAR	R	7/AG601	6/AG701	5'-0"	
R7-8A	2' - 1"	1' - 0"	ACCESSIBLE VAN	R	7/AG601	3 & 4/AG701	5'-0"	
V1.1	1' - 0"	8' - 0"	← OUT	V	8/AG601	5/AG701	8'-2"	
V1.2	1' - 0"	8' - 0"	← MAPLE ST ELM ST ↑	V	8/AG601	5/AG701	8'-2"	
V1.3	1' - 0"	8' - 0"	OUT →	V	8/AG601	5/AG701	8'-2"	
V1.4	1' - 0"	8' - 0"	↑ MAPLE ST ELM ST →	V	8/AG601	5/AG701	8'-2"	
V1.5	1' - 0"	5' - 0"	OUT →	V	8/AG601	5/AG701	8'-2"	
V1.6	1' - 0"	8' - 0"	COMMUTER PARKING THIS SIDE →	V	8/AG601	5/AG701	8'-2"	
V1.7	1' - 0"	8' - 0"	COMMUTER PARKING ONLY BEYOND THIS POINT	V	8/AG601	5/AG701	8'-2"	5" CAP HEIGHT TEXT THIS SIGN ONLY
V1.8	1' - 0"	8' - 0"	↑ COMMUTER PARKING ↑	V	8/AG601	5/AG701	8'-2"	
V2.1	1' - 6"	1' - 0"	← 4-HOUR PARKING →	V	7/AG601	3 & 4/AG701	5'-0"	
V2.2	1' - 6"	1' - 0"	← 4-HOUR PARKING	V	7/AG601	3 & 4/AG701	5'-0"	
V2.3	1' - 6"	1' - 0"	4-HOUR PARKING →	V	7/AG601	3 & 4/AG701	5'-0"	
V3.1	1' - 9"	1' - 0"	ELECTRIC VEHICLE PARKING ONLY	V	7/AG601	3 & 4/AG701	5'-0"	

SIGN GENERAL NOTES:

1. SIGN HEIGHT TO BE 2" ABOVE BOTTOM OF DOUBLE TEE PER LEVEL, UNLESS NOTED OTHERWISE.
2. SIGN CONTRACTOR SHALL REVIEW SIGN LOCATIONS PRIOR TO INSTALLATION WITH ENGINEER TO COORDINATE LIGHTING SYSTEM.
3. SIGNS SHALL BE MOUNTED LEVEL AND PLUMB, UNLESS NOTED OTHERWISE.
4. WHERE (2) TWO SIGNS ARE MOUNTED BACK TO BACK, SMALLEST SIGN SHALL INCREASE TO MATCH LARGER SIGN DIMENSIONS.
5. MAXIMUM BOLT INSERT EMBEDMENT LENGTH 1-1/4", UNLESS NOTED OTHERWISE.
6. DO NOT SCALE DRAWINGS.
7. BACKS AND EDGES OF ALL ALUMINUM SIGNS MOUNTED DIRECTLY TO STRUCTURE SHALL BE PAINTED (SIGN BACKGROUND COLOR) TO PREVENT CATHODIC REACTION.
8. SEE ARCHITECTURAL GRAPHICS PLANS FOR SIGN LOCATIONS.
10. ALL FONTS TO BE HELVETICA, OR APPROVED EQUAL.
11. MOUNTING HEIGHT IS FROM BOTTOM OF SIGN, UN.

SIGN LEGEND:

V - VEHICULAR (RETROREFLECTIVE TEXT)
R - REGULATORY (RETROREFLECTIVE)
PVC - PVC CLEARANCE PIPE
PS - PEDESTRIAN SUPERGRAPHICS
PP - PEDESTRIAN PANEL
A - ADA BRAILLE

LEVEL - COLOR LEGEND	
LEVEL	COLOR
LOWER TIER	RED
GROUND TIER	ORANGE
SECOND TIER	YELLOW
TOP TIER	GREEN

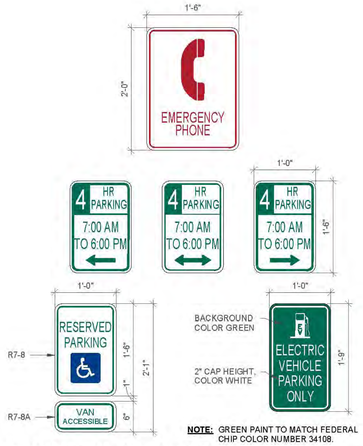

NOTE: GREEN PAINT TO MATCH FEDERAL CHIP COLOR NUMBER 34108.

7 PARKING SIGN DETAIL

6 PEDESTRIAN SIGNS

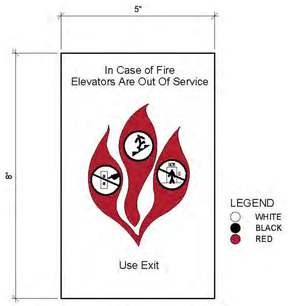

5 PED IN CASE OF FIRE SIGN

4 LEVEL DESIGNATION SIGN DETAIL

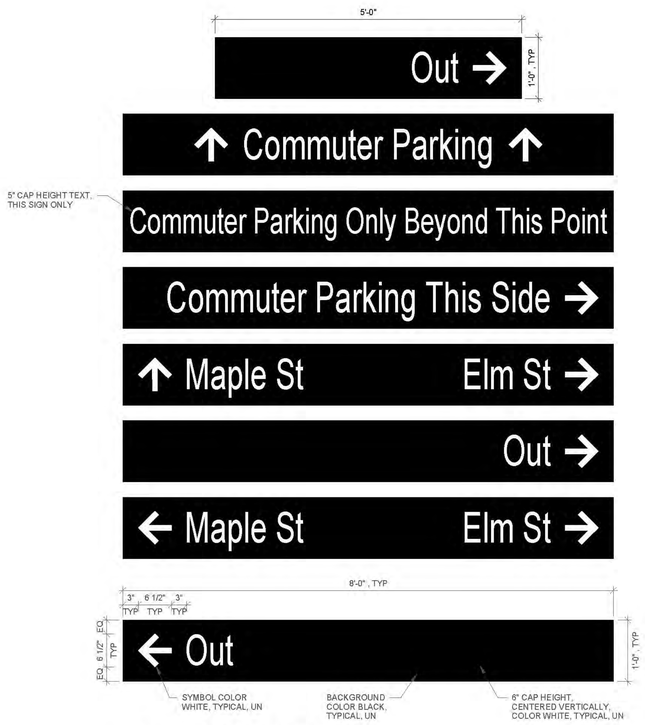

8 VEHICULAR SIGNS

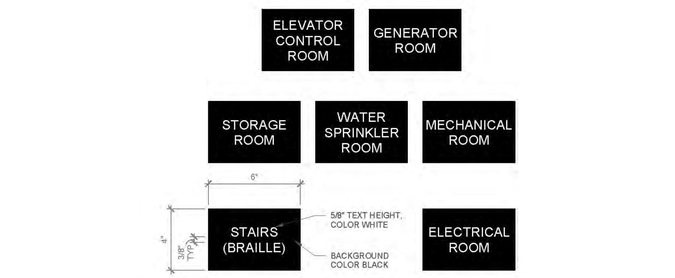

NOTE: SIGN SHOWN FOR EXAMPLE ONLY, SEE ARCH DRAWINGS FOR ROOM DESIGNATIONS.

3 STANDARD PLAQUE

2 CLEARANCE BAR DO NOT ENTER

1 CLEARANCE BAR STANDARD

PRELIMINARY - DO NOT USE FOR CONSTRUCTION

PRIME DESIGNER

WALKER CONSULTANTS

2885 Greenspoint Parkway, Suite 600
Hoffman Estates IL 60169
847.697.2640 Ph
www.walkerconsultants.com

ARCHITECTURAL

Studio Level 1

STUDIO LEVEL 1
1001 North Warren Street
Gary, IN 46403
219.951.0214 Ph
www.studiolevel1.com

Mount Prospect

MAPLE STREET PARKING DECK

MOUNT PROSPECT, IL

MARK	DATE	DESCRIPTION
		REVISIONS
SHEET ISSUE:		95% CONSTRUCTION DOCUMENTS
SHEET ISSUE DATE:		10/16/2019
PROJECT NO:		31-8504.00
DRAWN BY:		JVK
CHECKED BY:		DJM

COPYRIGHT © 2019. ALL RIGHTS RESERVED. NO PART OF THIS DOCUMENT MAY BE REPRODUCED IN ANY FORM OR BY ANY MEANS WITHOUT PERMISSION FROM WALKER CONSULTANTS.

SHEET TITLE:
SIGN SCHEDULE AND DETAILS

AG601

10/17/2019 6:37:39 AM C:\Revit Projects\31-8504.00-MAPLE STREET PG-STRUCT_R19_jvkkappel.rvt

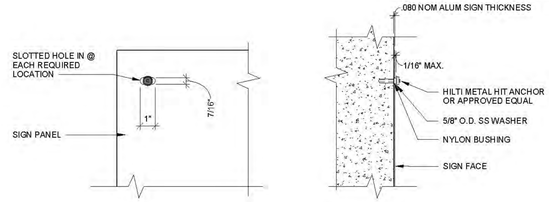

CONTRACTOR NOTES:
1. DO NOT OVERDRIVE METAL HIT ANCHORS. OVERDRIVEN ANCHORS WILL DAMAGE BUSHING & SIGNS.
2. USE THIS MOUNTING DETAIL ON BUMPER WALLS, COLUMNS, PANELS & BEAMS AT TOP TIER & IN CONDITIONS WHERE SIGN FACE IS EXPOSED TO DIRECT SUNLIGHT.

4 FLUSH SLOT SECTION

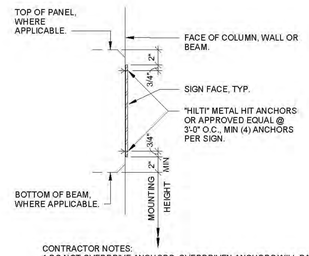

CONTRACTOR NOTES:
1. DO NOT OVERDRIVE ANCHORS. OVERDRIVEN ANCHORS WILL DAMAGE SIGNS.
2. WHERE TOP OF PANEL OR BOTTOM OF BEAM CONDITION OCCURS; MAINTAIN CONSTANT 2" DIMENSION FROM TOP OF PANEL OR BOTTOM OF BEAM TO SIGN AS SHOWN.

3 FLUSH MOUNTING DETAIL

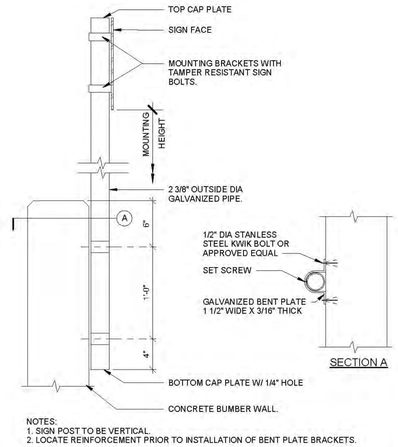

NOTES:
1. SIGN POST TO BE VERTICAL.
2. LOCATE REINFORCEMENT PRIOR TO INSTALLATION OF BENT PLATE BRACKETS.

6 BUMPER WALL POST MOUNTING DETAIL

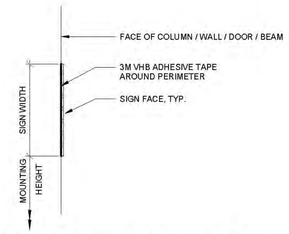

2 ADHESIVE MOUNTING DETAIL

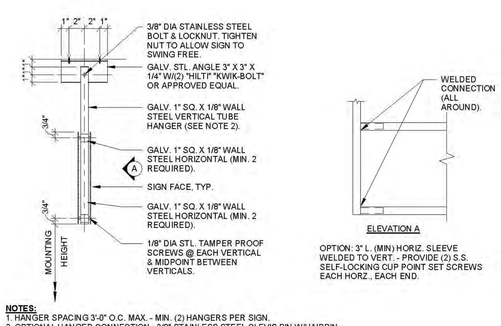

OPTION: 3" L. (MIN) HORIZ. SLEEVE WELDED TO VERT. - PROVIDE (2) S.S. SELF-LOCKING CUP POINT SET SCREWS EACH HORZ., EACH END.

NOTES:
1. HANGER SPACING 3'-0" O.C. MAX. - MIN. (2) HANGERS PER SIGN.
2. OPTIONAL HANGER CONNECTION - 3/8" STAINLESS STEEL CLEVIS PIN W/HAIRPIN COTTER.
3. MAX SIGN CANTILEVER 1'-0".

5 HANGING SIGN MOUNTING DETAIL

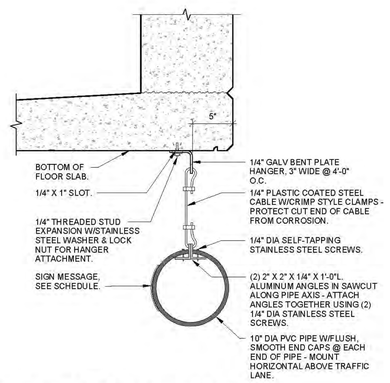

1 CLEARANCE BAR SECTION

PRELIMINARY - DO NOT USE FOR CONSTRUCTION

PRIME DESIGNER

WALKER CONSULTANTS

2895 Greenspoint Parkway, Suite 600
Hoffman Estates IL 60169
847.697.2640 Ph
www.walkerconsultants.com

ARCHITECTURAL

Studio Level 1

STUDIO LEVEL 1
1001 North Warren Street
Gary, IN 46403
219.951.0214 Ph
www.studiolevel1.com

Mount Prospect

MAPLE STREET PARKING DECK

MOUNT PROSPECT, IL

MARK	DATE	DESCRIPTION
1	Date 1	Revision 1

REVISIONS

SHEET ISSUE:	95% CONSTRUCTION DOCUMENTS
SHEET ISSUE DATE:	10/16/2019
PROJECT NO:	31-8504.00
DRAWN BY:	JVK
CHECKED BY:	DJM

COPYRIGHT © 2019. ALL RIGHTS RESERVED. NO PART OF THIS DOCUMENT MAY BE REPRODUCED IN ANY FORM OR BY ANY MEANS WITHOUT PERMISSION FROM WALKER CONSULTANTS.

SHEET TITLE:
SIGN MOUNTING DETAILS

AG701

10/17/2019 6:37:44 AM C:\Revit Projects\31-8504.00-MAPLE STREET PG-STRUCT_R19_jvkeppel.rvt

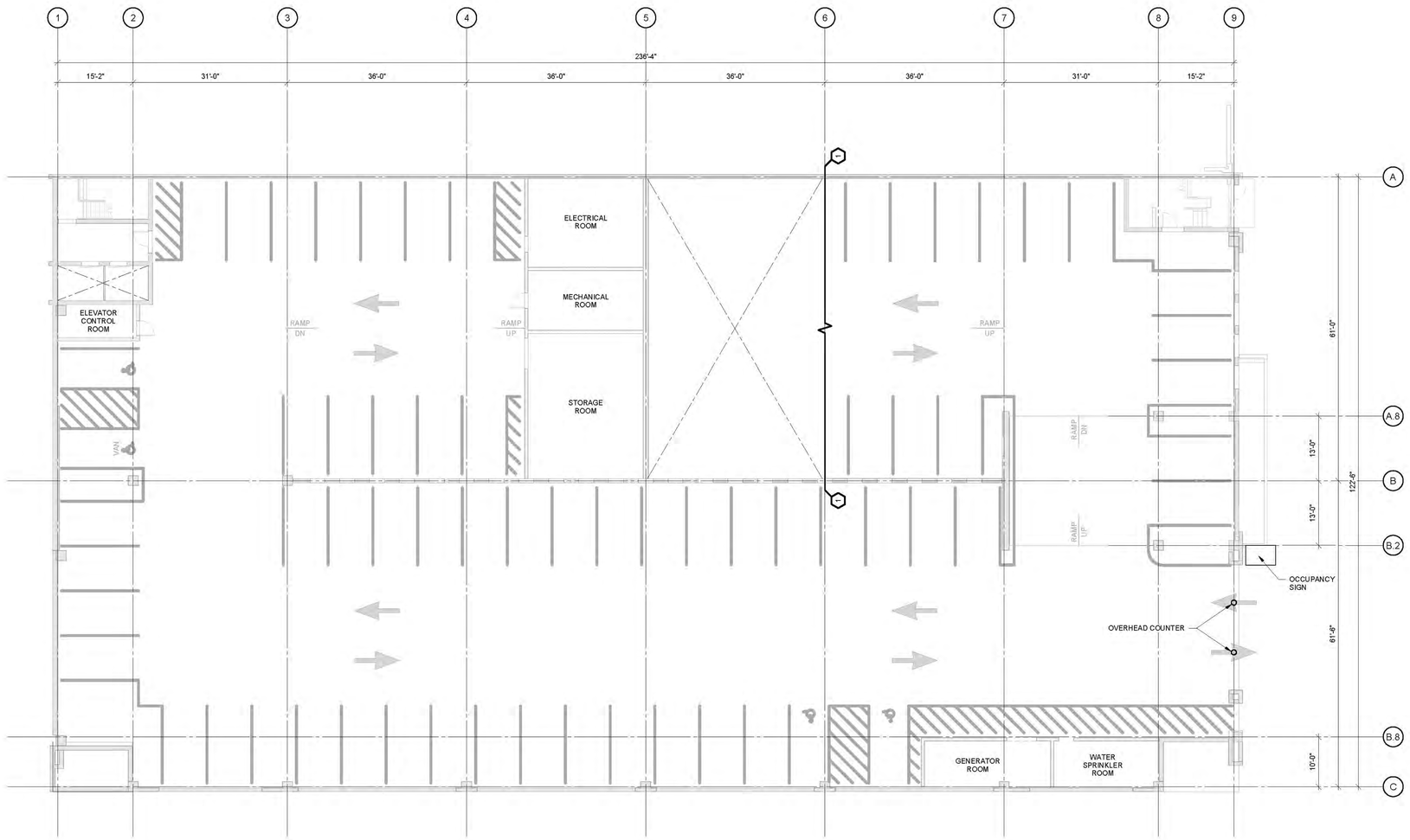

1 GROUND TIER PLAN
3/32" = 1'-0"

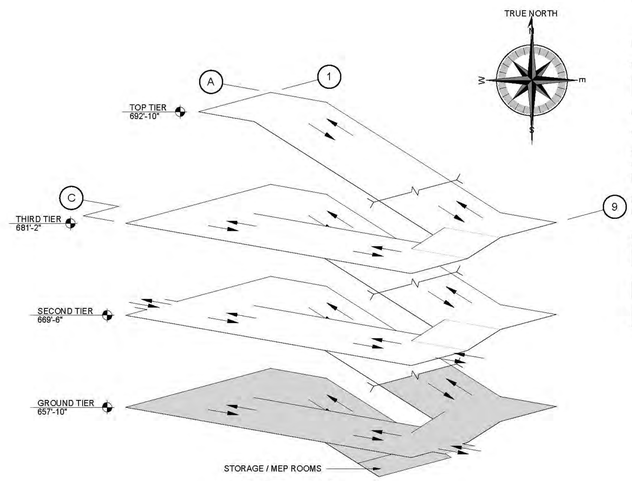

ISOMETRIC

PRELIMINARY - DO NOT USE FOR CONSTRUCTION

PRIME DESIGNER

WALKER CONSULTANTS

2885 Greenspoint Parkway, Suite 600
Hoffman Estates IL 60169
847.697.2640 Ph
www.walkerconsultants.com

ARCHITECTURAL

Studio Level 1

STUDIO LEVEL 1
1001 North Warren Street
Gary, IN 46403
219.951.0214 Ph
www.studiolevel1.com

Mount Prospect

MAPLE STREET
PARKING DECK

MOUNT PROSPECT, IL

MARK	DATE	DESCRIPTION
REVISIONS		

SHEET ISSUE:	95% CONSTRUCTION DOCUMENTS
SHEET ISSUE DATE:	10/16/2019
PROJECT NO:	31-8504.00
DRAWN BY:	JVK
CHECKED BY:	DJM

COPYRIGHT © 2019. ALL RIGHTS RESERVED. NO PART OF THIS DOCUMENT MAY BE REPRODUCED IN ANY FORM OR BY ANY MEANS WITHOUT PERMISSION FROM WALKER CONSULTANTS.

SHEET TITLE:
GROUND TIER PLAN - ALTERNATE 2

Q-101-2

10/17/2019 8:37:49 AM C:\Revit Projects\31-8504.00-MAPLE STREET PG-STRUCT_R19_jvkkappel.rvt

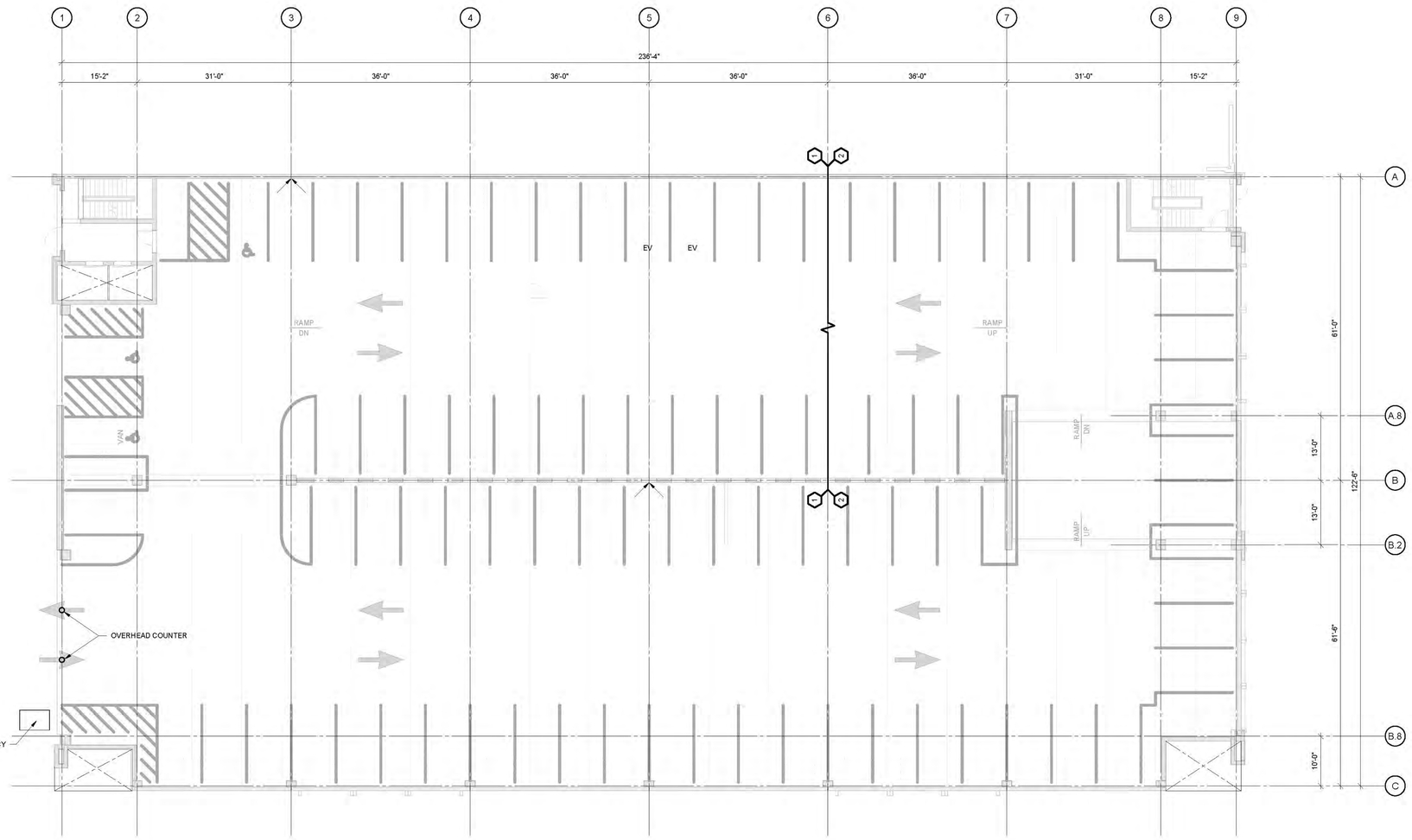

1 SECOND TIER PLAN
3/32" = 1'-0"

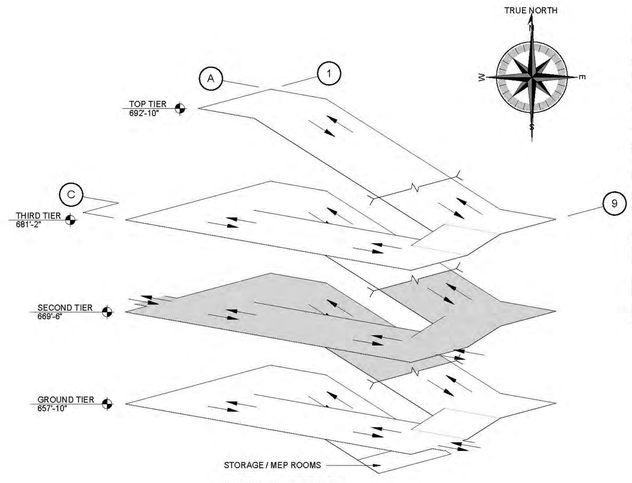

ISOMETRIC

PRELIMINARY - DO NOT USE FOR CONSTRUCTION

PRIME DESIGNER

WALKER CONSULTANTS

2885 Greenspoint Parkway, Suite 600
Hoffman Estates IL 60169
847.697.2640 Ph
www.walkerconsultants.com

ARCHITECTURAL

Studio Level 1

STUDIO LEVEL 1
1001 North Warren Street
Gary, IN 46403
219.951.0214 Ph
www.studiolevel1.com

Mount Prospect

MAPLE STREET
PARKING DECK

MOUNT PROSPECT, IL

MARK	DATE	DESCRIPTION
REVISIONS		

SHEET ISSUE:	95% CONSTRUCTION DOCUMENTS
SHEET ISSUE DATE:	10/16/2019
PROJECT NO:	31-8504.00
DRAWN BY:	JVK
CHECKED BY:	DJM

COPYRIGHT © 2019. ALL RIGHTS RESERVED. NO PART OF THIS DOCUMENT MAY BE REPRODUCED IN ANY FORM OR BY ANY MEANS WITHOUT PERMISSION FROM WALKER CONSULTANTS.

SHEET TITLE:
SECOND TIER PLAN - ALTERNATE 2

Q-102-2

10/17/2019 8:37:58 AM C:\Revit Projects\31-8504.00-MAPLE STREET PG-STRUCT_R19_jvkdappel.rvt

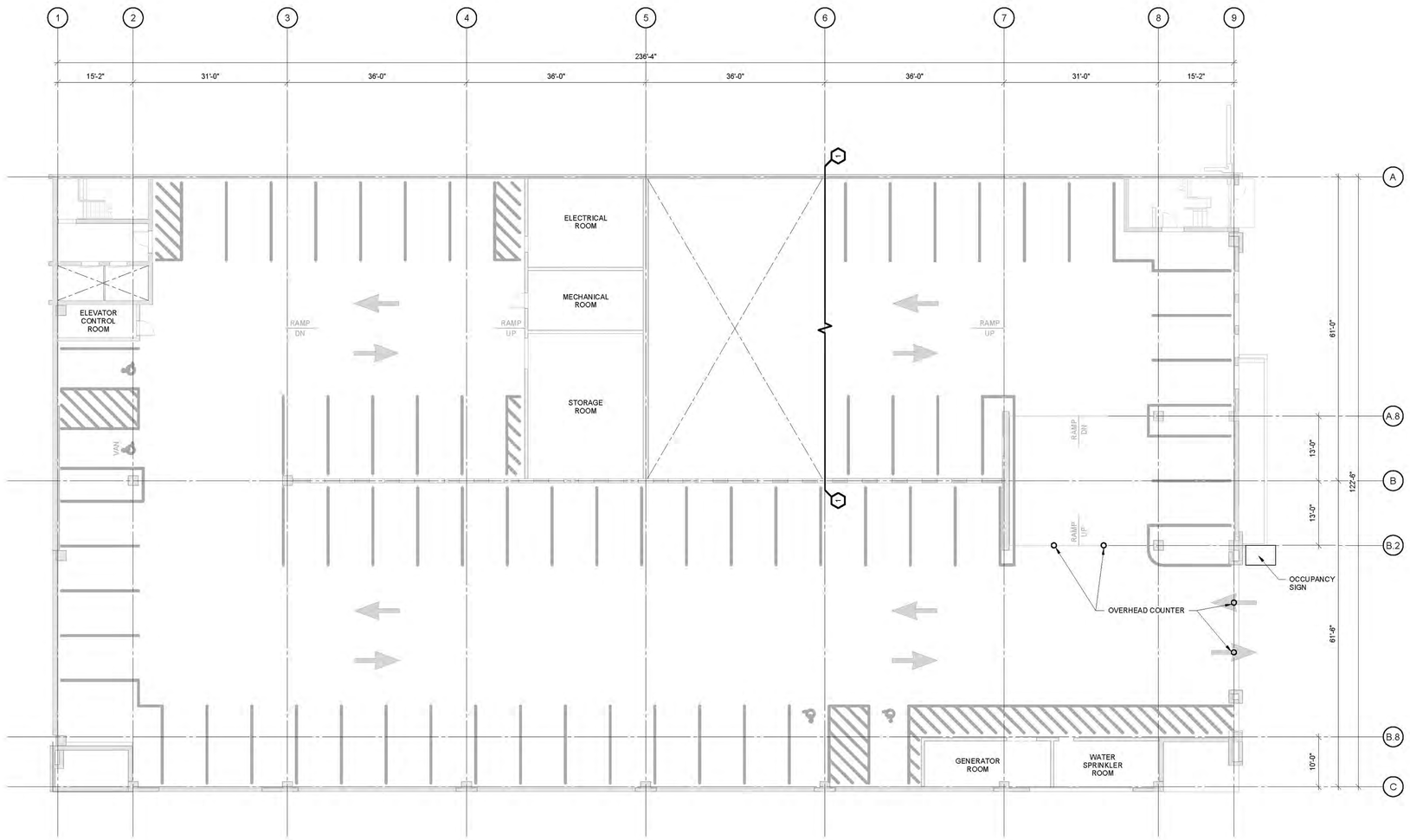

1 GROUND TIER PLAN
3/32" = 1'-0"

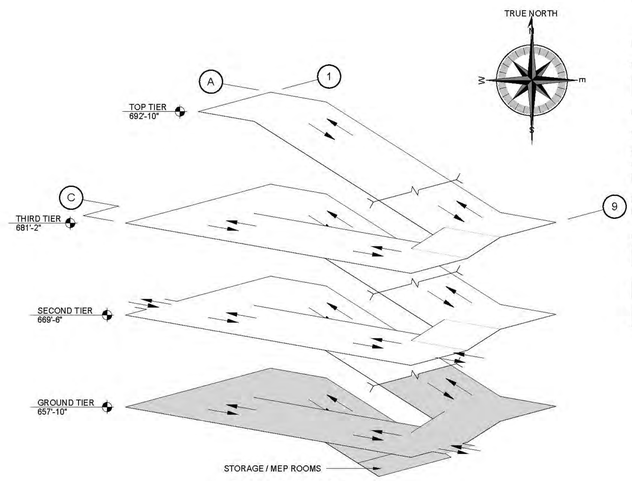

ISOMETRIC

PRELIMINARY - DO NOT USE FOR CONSTRUCTION

PRIME DESIGNER

WALKER CONSULTANTS

2885 Greenspoint Parkway, Suite 600
Hoffman Estates IL 60169
847.697.2640 Ph
www.walkerconsultants.com

ARCHITECTURAL

Studio Level 1

STUDIO LEVEL 1
1001 North Warren Street
Gary, IN 46403
219.951.0214 Ph
www.studiolevel1.com

Mount Prospect

MAPLE STREET
PARKING DECK

MOUNT PROSPECT, IL

MARK	DATE	DESCRIPTION
REVISIONS		

SHEET ISSUE:	95% CONSTRUCTION DOCUMENTS
SHEET ISSUE DATE:	10/16/2019
PROJECT NO:	31-8504.00
DRAWN BY:	JVK
CHECKED BY:	DJM

COPYRIGHT © 2019. ALL RIGHTS RESERVED. NO PART OF THIS DOCUMENT MAY BE REPRODUCED IN ANY FORM OR BY ANY MEANS WITHOUT PERMISSION FROM WALKER CONSULTANTS.

SHEET TITLE:
GROUND TIER PLAN - ALTERNATE 3

Q-101-3

10/17/2019 8:37:53 AM C:\Revit Projects\31-8504.00-MAPLE STREET PG-STRUCT_R19_jvkkappel.rvt

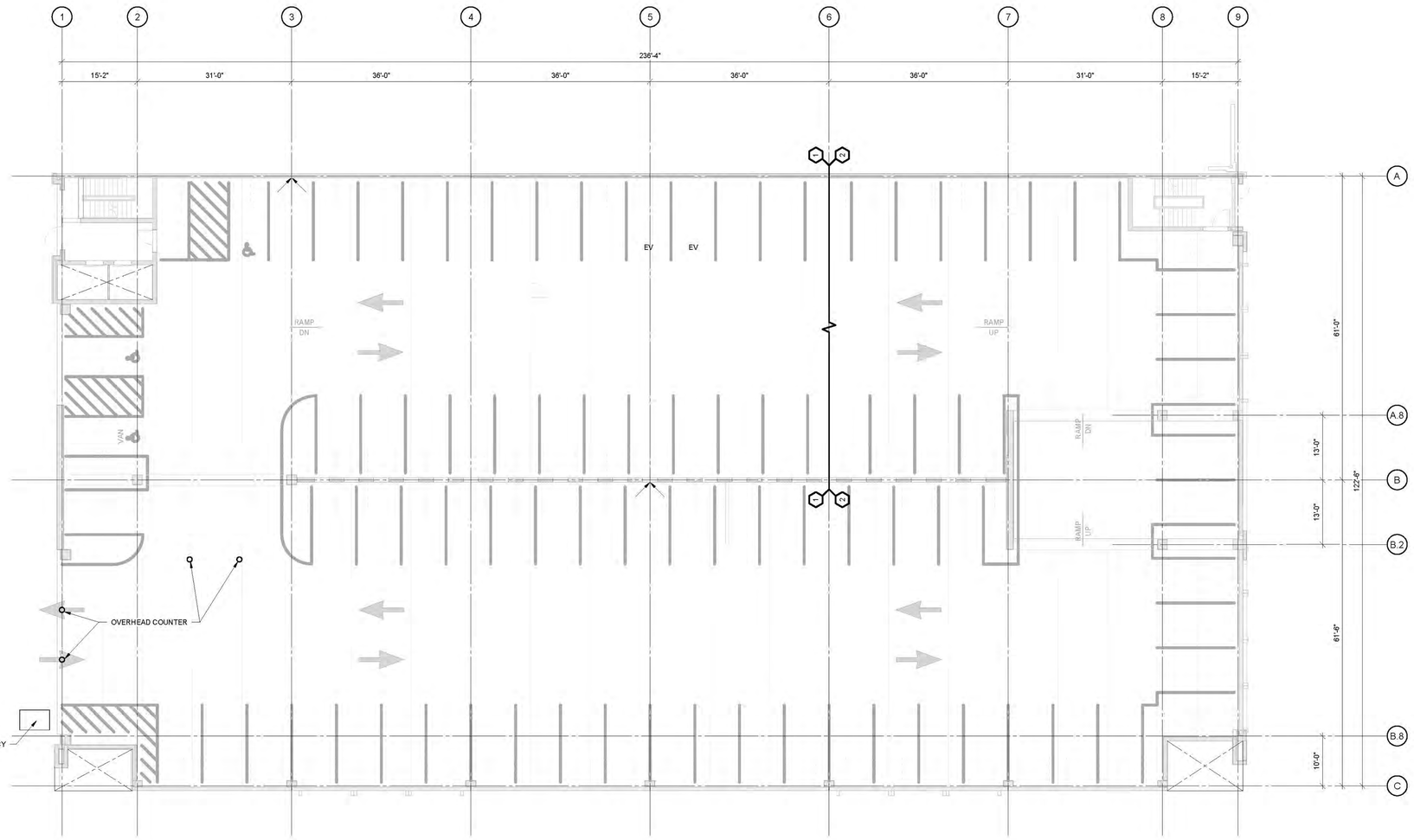

1 SECOND TIER PLAN
3/32" = 1'-0"

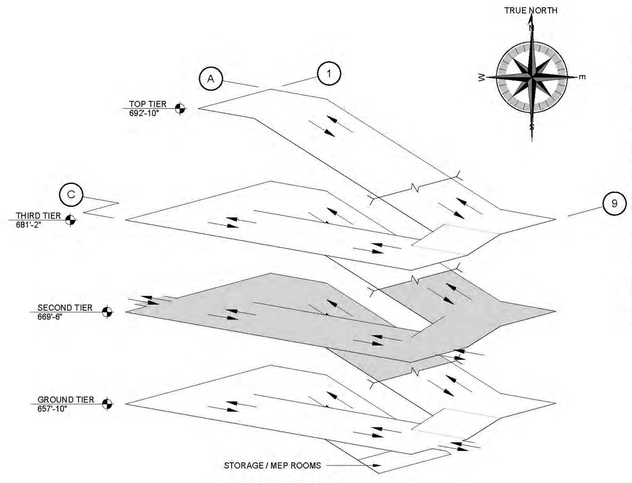

ISOMETRIC

PRELIMINARY - DO NOT USE FOR CONSTRUCTION

PRIME DESIGNER

WALKER CONSULTANTS

2885 Greenspoint Parkway, Suite 600
Hoffman Estates IL 60169
847.697.2640 Ph
www.walkerconsultants.com

ARCHITECTURAL

Studio Level 1

STUDIO LEVEL 1
1001 North Warren Street
Gary, IN 46403
219.951.0214 Ph
www.studiolevel1.com

Mount Prospect

MAPLE STREET
PARKING DECK

MOUNT PROSPECT, IL

MARK	DATE	DESCRIPTION
REVISIONS		

SHEET ISSUE:	95% CONSTRUCTION DOCUMENTS
SHEET ISSUE DATE:	10/16/2019
PROJECT NO:	31-8504.00
DRAWN BY:	JVK
CHECKED BY:	DJM

COPYRIGHT © 2019. ALL RIGHTS RESERVED. NO PART OF THIS DOCUMENT MAY BE REPRODUCED IN ANY FORM OR BY ANY MEANS WITHOUT PERMISSION FROM WALKER CONSULTANTS.

SHEET TITLE:
SECOND TIER PLAN - ALTERNATE 3

Q-102-3

10/17/2019 8:38:03 AM C:\Revit Projects\31-8504.00-MAPLE STREET PG-STRUCT_R19_jvkdappel.rvt

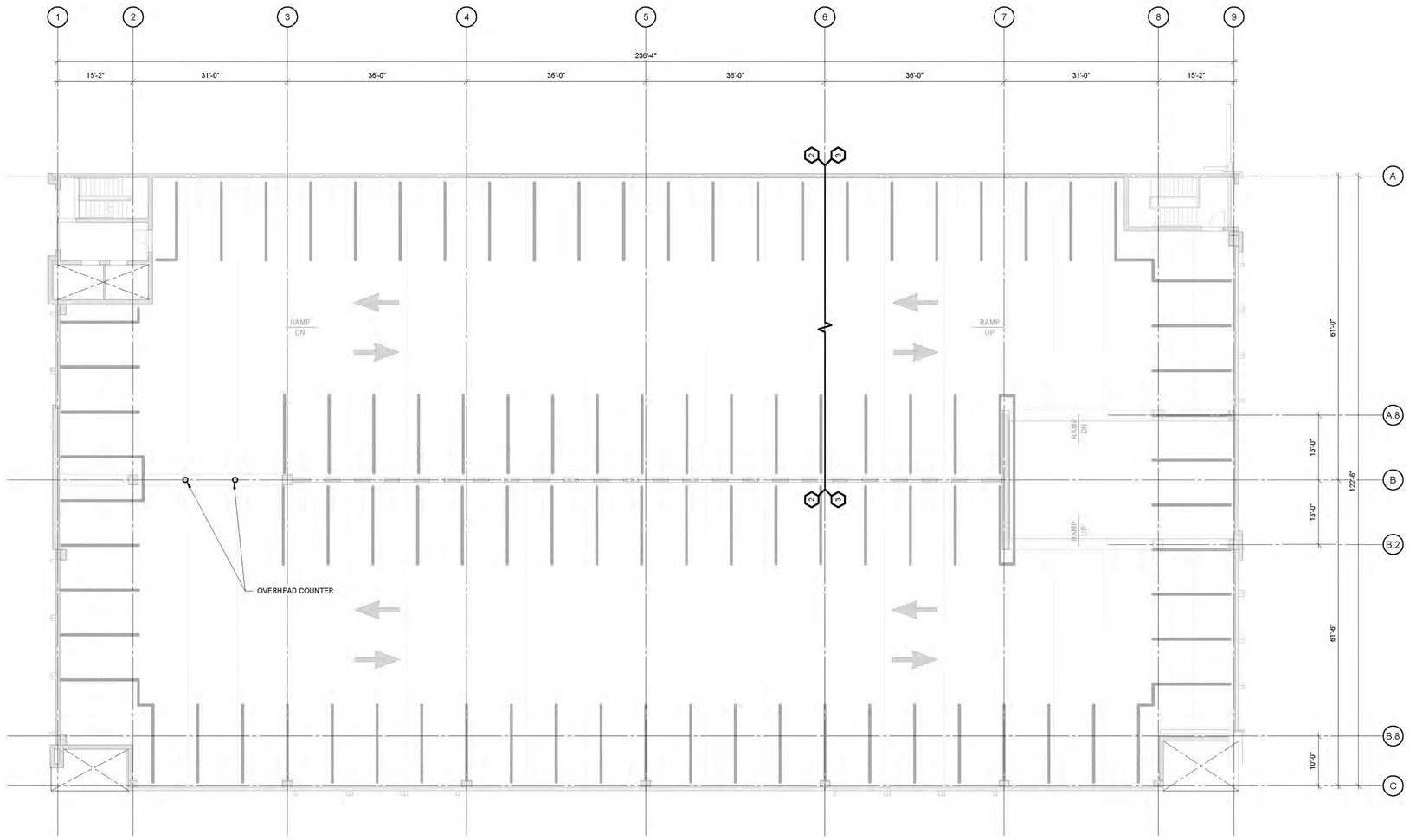

1 THIRD TIER PLAN
3/32" = 1'-0"

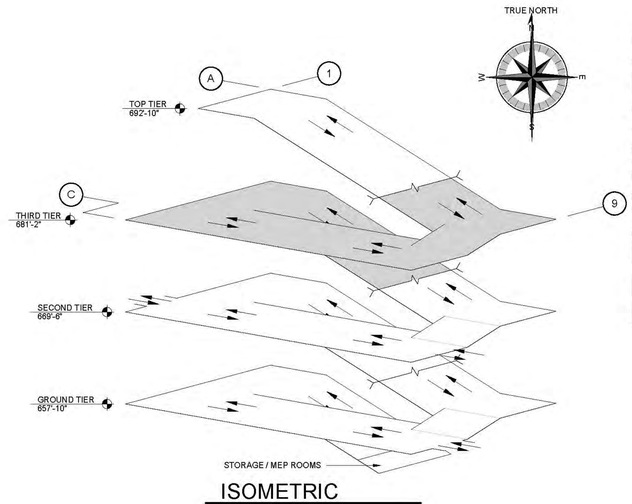

ISOMETRIC

PRELIMINARY - DO NOT USE FOR CONSTRUCTION

PRIME DESIGNER

WALKER CONSULTANTS

2885 Greenspoint Parkway, Suite 600
Hoffman Estates IL 60169
847.697.2640 Ph
www.walkerconsultants.com

ARCHITECTURAL

Studio Level 1

STUDIO LEVEL 1
1001 North Warren Street
Gary, IN 46403
219.951.0214 Ph
www.studiolevel1.com

Mount Prospect

MAPLE STREET
PARKING DECK

MOUNT PROSPECT, IL

MARK	DATE	DESCRIPTION
		REVISIONS

SHEET ISSUE:	95% CONSTRUCTION DOCUMENTS
SHEET ISSUE DATE:	10/16/2019
PROJECT NO:	31-8504.00
DRAWN BY:	JVK
CHECKED BY:	DJM

COPYRIGHT © 2019. ALL RIGHTS RESERVED. NO PART OF THIS DOCUMENT MAY BE REPRODUCED IN ANY FORM OR BY ANY MEANS WITHOUT PERMISSION FROM WALKER CONSULTANTS.

SHEET TITLE:
THIRD TIER PLAN - ALTERNATE 3

Q-103-3

10/17/2019 8:38:08 AM C:\Revit Projects\31-8504.00-MAPLE STREET PG-STRUCT_R19_jvkdappel.rvt

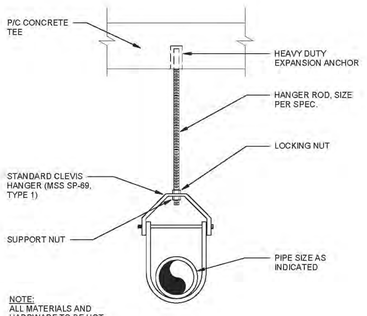

NOTE:
ALL MATERIALS AND HARDWARE TO BE HOT DIPPED GALVANIZED OR STAINLESS STEEL.

1 PIPE HANGER DETAIL

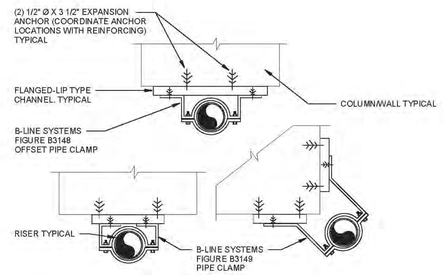

NOTES
1. IF ADDITIONAL DISTANCE FROM COLUMN OR WALL IS REQUIRED OR IF RISER IS MOUNTED AT EDGE OF COLUMN, USE B-LINE SYSTEMS FIGURE B3149 CLAMP. BEND AND DRILL HOLES IN LEGS AS REQUIRED.
2. CHANNEL OR CLAMP ARE NOT TO EXTEND PAST EDGE OF COLUMN OR WALL. IF OUTSIDE DIMENSION OF CLAMP IS GREATER THAN THICKNESS OF WALL OR COLUMN, USE A B-LINE SYSTEMS FIGURE B3149 HANGER, BEND LEGS INWARD AND DRILL HOLES AS REQUIRED.
3. ALL MATERIALS AND HARDWARE SHALL BE HOT DIPPED GALVANIZED OR STAINLESS STEEL.
4. SPECIFY TYPE OF PIPE FOR SIZING PIPE CLAMPS.

2 PIPE SUPPORT DETAIL

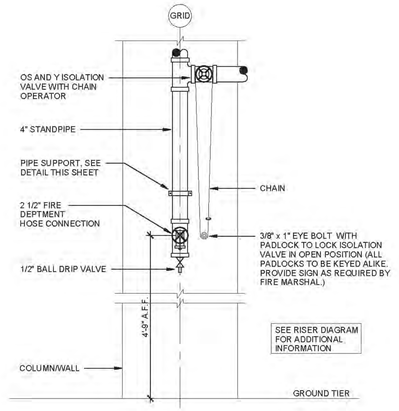

3 CHAIN OPERATED ISOLATION VALVE DETAIL

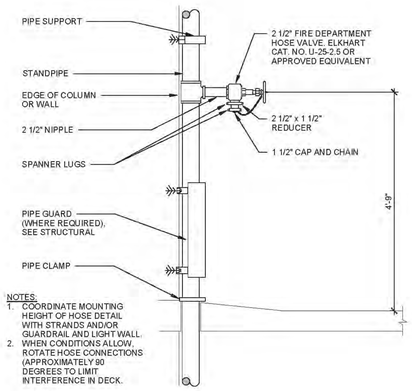

NOTES:
1. COORDINATE MOUNTING HEIGHT OF HOSE DETAIL WITH STRANDS AND/OR GUARDRAIL AND LIGHT WALL.
2. WHEN CONDITIONS ALLOW, ROTATE HOSE CONNECTIONS (APPROXIMATELY 90 DEGREES TO LIMIT INTERFERENCE IN DECK.

4 FIRE DEPARTMENT HOSE CONNECTION DETAIL

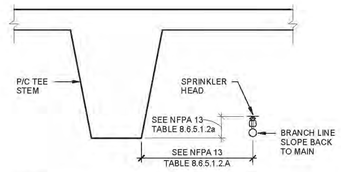

NOTE:
SEE NFPA 13 FOR OBSTRUCTION CLEARANCE REQUIREMENTS

5 SPRINKLER DETAIL

GENERAL NOTES

1. ALL PIPING AND RISERS EXPOSED TO POSSIBLE BUMPER DAMAGE SHALL BE PROTECTED W/ PIPE GUARDS. SEE STRUCTURAL DRAWINGS.
2. PROVIDE CAST IRON PIPE SLEEVES 2" LARGER THAN PIPE OUTSIDE DIA. AT GRADE SLAB PENETRATIONS. WRAP PIPES W/ 1/2" FIBERGLASS AND SEAL OPENING W/ APPROVED SEALANT. TYPICAL AT GRADE SLAB.
3. PIPE HANGERS AND SUPPORTS SHALL BE ARRANGED SO THAT THEY WILL SUSTAIN THE LOADS AND RETAIN THE PIPING SECURELY IN POSITION UNDER FULLY LOADED CONDITIONS. SEE DETAILS 1 & 2/F-001.
4. COORDINATE ALL BLOCK-OUTS REQUIRED W/ GENERAL CONTRACTOR.
5. POWDER PROPELLED FASTENERS PROHIBITED.
6. PIPING FOR STANDPIPE SYSTEM SHALL BE SCHEDULE 40 GALVANIZED STEEL ABOVE GRADE AND AWWA C151 DUCTILE IRON UNDERGROUND. STANDPIPES ARE TO BE 4". ALL INTERCONNECTING STANDPIPE PIPING IS TO BE 6". (INCREASE PIPE SIZE OR PIPE PRESSURE RATING AS REQUIRED TO MEET CODE REQUIREMENTS.) ALL INTERCONNECTING STANDPIPE PIPING IS TO BE HUNG UNDER SECOND TIER FLOOR AND ROUTED AS CLOSE AS POSSIBLE TO COLUMNS AND WALLS. ROUTE UP BETWEEN THE TEE STEMS WHERE INDICATED. ROUTE PIPING AS HIGH AS POSSIBLE WHILE MAINTAINING 1/4" SLOPE PER 10'-0" MINIMUM TO DRAIN POINTS (STANDPIPE AND SIAMESE CONNECTIONS). DO NOT INSTALL ADDITIONAL AUXILIARY DRAIN VALVES WITHOUT WRITTEN APPROVAL OF ENGINEER. MAINTAIN A MINIMUM HEADROOM CLEARANCE AS NOTED ON STRUCTURAL DRAWINGS. COORDINATE ANY REQUIRED BLOCKOUTS/SLEEVES/DAPS IN BEAMS WITH GENERAL AND PRECAST CONTRACTORS. SEE RISER DIAGRAM ON SHEET F-601 FOR ISOLATION VALVE AND OTHER REQUIREMENTS. PROVIDE EARTHQUAKE BRACING AND SUPPORTS AS REQUIRED BY N.F.P.A. DO NOT INSTALL PIPING CLOSER THAN 3'-0" HORIZONTALLY TO LIGHT FIXTURES.
7. FIRE PROTECTION SYSTEM, PIPING, VALVES AND ACCESSORIES INDICATED ON THE DRAWINGS ARE DIAGRAMMATIC ONLY. IT IS THE RESPONSIBILITY OF THE DESIGNING CONTRACTOR TO VERIFY EQUIPMENT SELECTIONS, PIPE ROUTING, PIPE SIZING, DRAIN POINTS, TEST CONNECTIONS, ETC., FOR STATE BUILDING CODE COMPLIANCE, INSURER COMPLIANCE, ARCHITECTURAL AND CONFORMITY. THE CONTRACTOR SHALL PROVIDE ALL DRAWINGS AND CALCS REQUIRED BY THE FIRE MARSHAL AND ENGINEER.
8. ALL FIRE PROTECTION VALVES REQUIRED TO BE LOCKED OR MONITORED BY THE N.F.P.A. SHALL BE LOCKED.
9. FIRE PROTECTION CONTRACTOR SHALL PROVIDE ALL TESTS AND INSPECTIONS PER N.F.P.A. 14. ALL REQUIRED PERMITS, APPROVALS AND INSPECTION CERTIFICATES SHALL BE OBTAINED AND PAID FOR BY THIS CONTRACTOR.
10. PROVIDE EXPANSION LOOPS AT ALL LOCATIONS PIPING CROSSES EXPANSION JOINTS.
11. CONTRACTOR IS TO COORDINATE SPRINKLER HEAD LOCATIONS W/ LIGHT FIXTURES, DUCTS AND OTHER EQUIPMENT TO BE INSTALLED. LIGHT FIXTURES ALWAYS HAVE PRECEDENCE. WHERE CONFLICT W/ LIGHT FIXTURES OR OTHER EQUIPMENT OCCURS, CONTRACTOR IS TO ADJUST AND OR ADD ADDITIONAL SPRINKLER HEADS AS REQUIRED TO MEET NFPA 13 OBSTRUCTION CLEARANCE AND SEPERATION REQUIREMENTS. COORDINATE W/ ELECTRICAL, MECHANICAL, PLUMBING AND GENERAL CONTRACTORS.
12. SEE SPECIFICATIONS FOR ABOVE GRADE SPRINKLER SYSTEM PIPING OPTIONS. UNDERGROUND PIPING SHALL BE AWWA C151 DUCTILE IRON (CEMENT LINED & BITUMISTIC COATED) UNDERGROUND. ROUTE SPRINKLER MAINS AS CLOSE AS POSSIBLE TO COLUMNS AND WALLS. MAINTAIN A MINIMUM HEADROOM CLEARANCE AS NOTED ON STRUCTURAL DRAWINGS (COORDINATE ANY REQUIRED BLOCKOUTS W/ GENERAL CONTRACTORS). ROUTE PIPING AS HIGH AS POSSIBLE WHILE MAINTAINING 1/40" PER FOOT MINIMUM SLOPE TO DRAIN POINTS. PROVIDE DRAINS AT SPRINKLER SYSTEM LOW POINTS AS REQUIRED. PROVIDE EARTHQUAKE BRACING, SUPPORTS AND FLEXIBLE PIPE COUPLINGS AS REQUIRED BY THE N.F.P.A. DO NOT INSTALL SPRINKLER HEADS OR PIPING LOCATED BELOW LIGHT FIXTURES CLOSER THAN 3'-0" HORIZONTALLY TO LIGHT FIXTURES. PIPING SHALL BE REROUTED AROUND LIGHT FIXTURES OR OBSTRUCTION AS REQUIRED.
13. SPRINKLER SYSTEM CONTRACTOR IS TO COORDIANTE EXACT LOCATION OF SPRINKLER HEADS AND PIPING IN STAIR TOWERS AND ELEVATOR LOBBIES TO AVOID LIGHT FIXTURES.

APPLICABLE CODES

1. 2015 INTERNATIONAL BUILDING CODE
2. 2015 INTERNATIONAL FIRE CODE
3. VILLAGE OF MOUNT PROSPECT FIRE CODE

DESIGN PARAMETERS

1. WATER FLOW TEST CONDUCTED ON 10/2/18, BY MOUNT PROSPECT FIRE DEPARTMENT AND PUBLIC WORKS DEPARTMENT, YIELDED THE FOLLOWING RESULTS:
   STATIC - 55 PSIG
   RESIDUAL - 52 PSIG
   FLOW - 1087 GPM

   CONTRACTOR SHALL PERFORM A NEW WATER FLOW TEST, AT THE NEAREST TWO HYDRANTS, AT THE BEGINNING OF THIS CONSTRUCTION PROJECT. SUBMIT FLOW TEST RESULTS TO THE ARCHITECT/ENGINEER PRIOR TO STARTING DESIGN WORK.

   IF THE NEW TEST RESULTS DO NOT REMAIN ACCURATE, A FIRE PUMP MAY BE NECESSARY TO MEET THE DEMAND OF THE AUTOMATIC FIRE SUPPRESSION SPRINKLER SYSTEM PROPOSED.

   CONTRACTOR SHALL HYDRAULICALLY DESIGN THE SPRINKLER SYSTEM BASED ON RESULTS OF THE NEW FLOW TEST, GIVING A 10 PSIG CUSHION BETWEEN THE TESTED PRESSURE AND THE DESIGN PRESSURE. SUBMIT DRAWINGS AND CALCULATIONS FOR APPROVAL PRIOR TO START OF CONSTRUCTION. THE SPRINKLER SYSTEM SHALL BE AN AUTOMATIC DRY SYSTEM.
2. WATER SERVICE FOR THE FIRE SUPPRESSION SYSTEMS SHALL BE SUPPLIED AS FOLLOWS:
   A. AUTOMATIC SPRINKLER SYSTEM - PERMANENT FIRE WATER FEED FROM THE DOMESTIC WATER SYSTEM.
   B. STANDPIPE SYSTEM - MANUAL CONNECTION BY FIRE DEPARTMENT WITH PUMPER TRUCK.
3. SPRINKLERS SHALL BE PROVIDED THROUGHOUT THE ENTIRE BUILDING EXCEPT WHERE EXEMPT BY CODE. THE SPRINKLER SYSTEM HAS MULTIPLE DRY PIPE SYSTEMS/ZONES WHICH SHALL BE SIZED AND HYDRAULICALLY DESIGNED IN ONE OF THE FOLLOWING MANNERS:
   A. THE VOLUME OF EACH DRY PIPE SYSTEM SHALL BE:
      a. LESS THAN 500 GALLONS WITHOUT A QUICK-OPENING DEVICE (ACCELERATOR) OR
      b. LESS THAN 750 GALLONS WITH A QUICK-OPENING DEVICE (ACCELERATOR)
   B. IN LIEU OF A LIMIT ON SYSTEM VOLUME, A LISTED AND NATIONALLY RECOGNIZED COMPUTER PROGRAM/METHOD SHALL CALCULATE ACCEPTABLE WATER DELIVERY TIME CAN BE ACHIEVED PER THE REQUIREMENTS OF NFPA 13.
4. DESIGN STANDARDS:
   2015 INTERNATIONAL FIRE CODE
   NFPA-13 - 2013 - SPRINKLER SYSTEMS
   NFPA-14 - 2013 - STANDPIPE SYSTEMS
5. BUILDING CLASSIFICATION:
   OH1, ORDINARY HAZARD - GROUP 1 (PARKING GARAGE)
6. DENSITY/AREA:
   PARKING GARAGE - 0.15 GPM/FT^2 OVER 1500 FT^2
7. MAXIMUM SPRINKLER SPACING:
   130 FT^2 PER SPRINKLER.
8. FLOW RATE AT REMOTE SPRINKLER:
   19.5 GPM @ 13 PSI WITH K=5.8.
9. MINIMUM NUMBER OF SPRINKLERS TO CALCULATE:
   12 HEADS @ 130 FT^2 PER SPRINKLER, ADJUST FOR OTHER SPRINKLER SPACING.
10. HOSE STREAM ALLOWANCE: 250 GPM.
11. BUILDING STATIC PRESSURE:
    31 FT. OR 14.0 PSI
12. OTHER DOMESTIC WATER DEMANDS:
    10 GPM (INTERMITTENT COLD WATER WASH DOWN SYSTEM).
13. ESTIMATED SYSTEM PRESSURE AND FLOW DEMAND:
    44.4 PSI WITH 601 GPM @ 130 FT^2/HEAD.
14. SPRINKLER SPACING MAY FALL BELOW 130 FT^2. THE NUMBER OF SPRINKLERS CALCULATED SHALL BE ADJUSTED TO REFLECT ALTERNATE SPRINKLER SPACING.
15. STANDPIPE REQUIREMENTS: PROVIDE A MANUAL WET CLASS ONE STANDPIPE SYSTEM WITH 2 1/2" HOSE VALVES, SIAMESE INLET CONNECTION AND 3/4" MANUALLY OPERATED FILL CONNECTION TO SUPPLY 500 GPM @ 100 PSI TO THE STANDPIPE WITH THE TWO HYDRAULICALLY MOST REMOTE HOSE CONNECTIONS, AND 250 GPM FOR EACH ADDITIONAL STANDPIPE (1250 GPM MAX).
16. AN INSPECTOR'S TEST VALVE STATION SHALL BE PROVIDED AT THE HYDRAULICALLY MOST REMOTE POINT IN EACH SPRINKLER SYSTEM ZONE (A SINGLE ZONE SHALL NOT EXCEED 52,000 FT^2).

FIRE PROTECTION SYMBOLS

	PLUMBING RISER
SP	STANDPIPE
	SEWER VALVE
	FIRE DEPARTMENT SIAMESE CONNECTION
	FIRE DEPARTMENT STORZ CONNECTION
	FIRE DEPARTMENT HOSE CONNECTION (PLAN VIEW)
	FIRE DEPARTMENT HOSE CONNECTION (ELEVATION VIEW)
	OS & Y VALVE
	GATE VALVE
	CHECK VALVE (ARROW INDICATES DIRECTION OF FLOW)
M	WATER METER
SP	STANDPIPE LINE
V	VENT LINE
	ARROW INDICATES DIRECTION OF FLOW
	PIPING BELOW GRADE
	PIPING ABOVE GRADE

FIRE PROTECTION ABBREVIATIONS

A.F.F.	ABOVE FINISHED FLOOR	MT	MOUNT
ARCH.	ARCHITECT (ARCHITECTURAL)	O.S. & Y.	OUTSIDE SCREW & YOKE
BLK.	BLOCK	P/C	PRECAST
C.I.P.	CAST IN PLACE	P.S.I.	POUNDS PER SQUARE INCH
C.O.	CLEANOUT	R.W.C.	RAIN WATER COLLECTOR
CONC.	CONCRETE	SHT.	SHEET
CONN.	CONNECTION	SIM.	SIMILAR
C.W.R.	COLD WATER RISER	S.O.G.	SLAB ON GRADE
D.I.	DUCTILE IRON	SP	STANDPIPE
DET.	DETAIL	SQ. FT.	SQUARE FEET
DIA.	DIAMETER	STRUCT.	STRUCTURAL
F.D.	FLOOR DRAIN	S.V.	SEWER VALVE
GALV.	GALVANIZED	T.D.	TRENCH DRAIN
GEN'L	GENERAL	T.F.A.	TO FLOOR ABOVE
G.P.M.	GALLON PER MINUTE	T.F.B.	TO FLOOR BELOW
INV.	INVERT	TYP.	TYPICAL
M.C.	MECHANICAL CONTRACTOR	U.N.O.	UNLESS NOTED OTHERWISE
M.H.	MANHOLE	W/	WITH

PRELIMINARY - DO NOT USE FOR CONSTRUCTION

PRIME DESIGNER
WALKER CONSULTANTS
2895 Greenspoint Parkway, Suite 600
Hoffman Estates IL 60169
847.697.2640 Ph
www.walkerconsultants.com

ARCHITECTURAL
Studio Level 1
STUDIO LEVEL 1
1001 North Warren Street
Gary, IN 46403
219.951.0214 Ph
www.studiolevel1.com

MAPLE STREET PARKING DECK

MOUNT PROSPECT, IL

MARK	DATE	DESCRIPTION
		REVISIONS
SHEET ISSUE:		95% CONSTRUCTION DOCUMENTS
SHEET ISSUE DATE:		10/18/2019
PROJECT NO:		31-8504.00
DRAWN BY:		LF
CHECKED BY:		JDS

COPYRIGHT © 2019. ALL RIGHTS RESERVED. NO PART OF THIS DOCUMENT MAY BE REPRODUCED IN ANY FORM OR BY ANY MEANS WITHOUT PERMISSION FROM WALKER CONSULTANTS.

SHEET TITLE:
FIRE PROTECTION GENERAL NOTES, DETAILS, SCHEDULES, SYMBOLS & ABBREVIATIONS

F-001

10/17/2019 9:06:58 AM C:\Revit Projects\31-8504.00-MAPLE STREET PKG-MEP_R19_LStirling\F3HSB.rvt

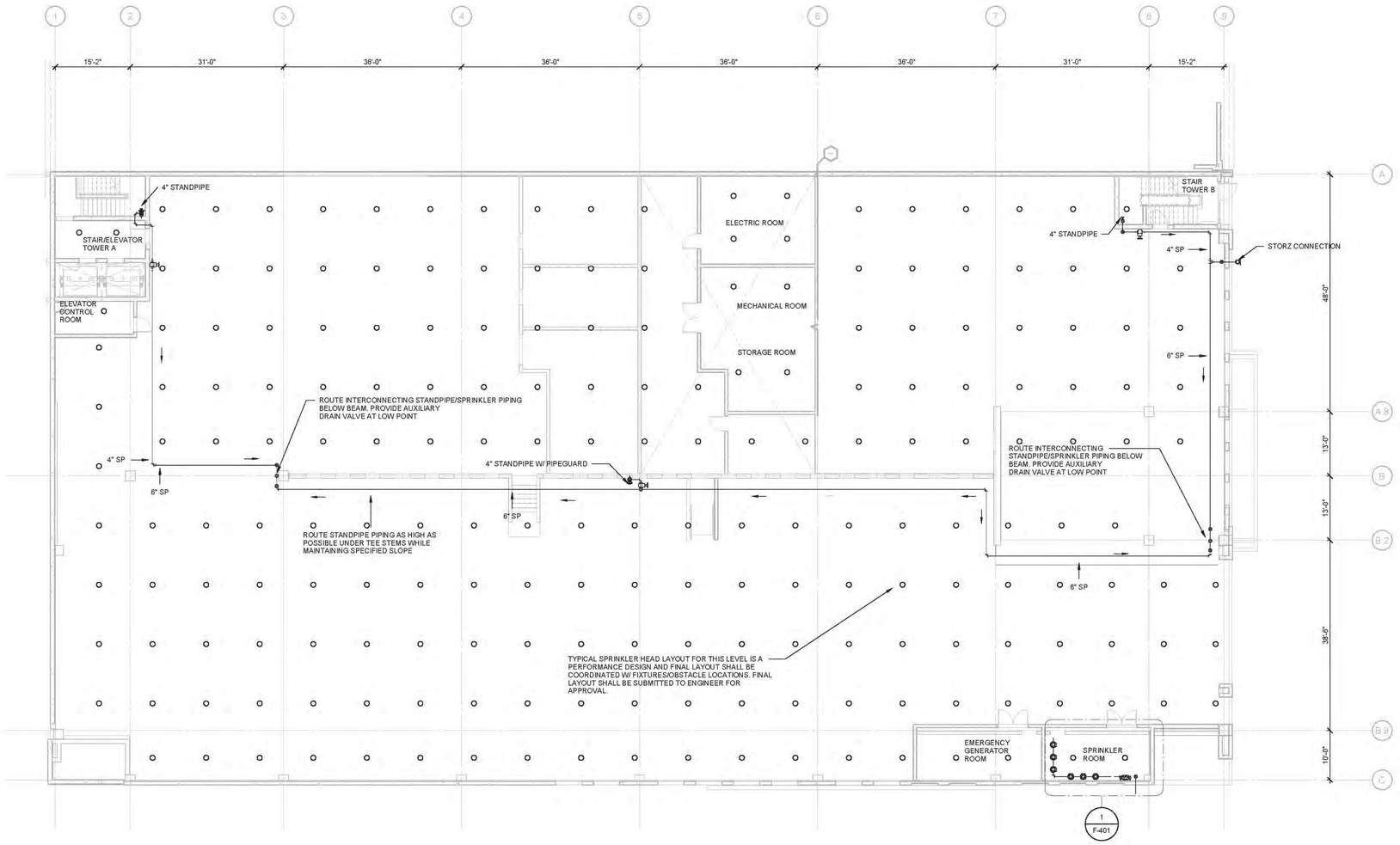

1 GROUND TIER PLAN

3/32" = 1'-0"

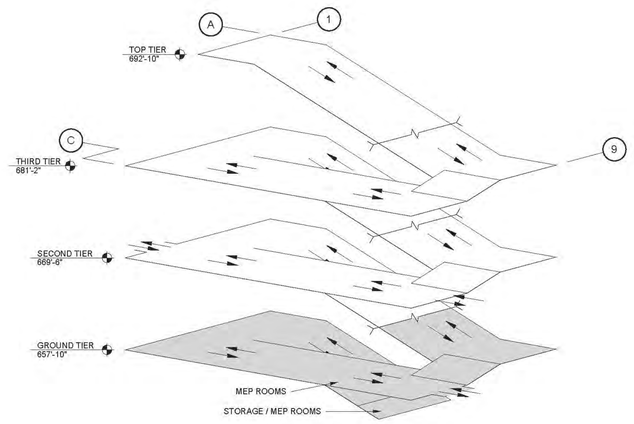

ISOMETRIC

PRELIMINARY - DO NOT USE FOR CONSTRUCTION

PRIME DESIGNER

WALKER CONSULTANTS

2895 Greenspoint Parkway, Suite 600
Hoffman Estates IL 60169
847.697.2640 Ph
www.walkerconsultants.com

ARCHITECTURAL

Studio Level 1

STUDIO LEVEL 1
1001 North Warren Street
Gary, IN 46403
219.951.0214 Ph
www.studiolevel1.com

Mount Prospect

MAPLE STREET
PARKING DECK

MOUNT PROSPECT, IL

MARK	DATE	DESCRIPTION
		REVISIONS
SHEET ISSUE:		95% CONSTRUCTION DOCUMENTS
SHEET ISSUE DATE:		10/16/2019
PROJECT NO:		31-8504.00
DRAWN BY:		LF
CHECKED BY:		JDS

COPYRIGHT © 2019. ALL RIGHTS RESERVED. NO PART OF THIS DOCUMENT MAY BE REPRODUCED IN ANY FORM OR BY ANY MEANS WITHOUT PERMISSION FROM WALKER CONSULTANTS.

SHEET TITLE:
GROUND TIER FIRE PROTECTION PLAN

F-101

10/17/2019 9:07:03 AM C:\Revit Projects\31-8504 (00-MAPLE STREET PG-MEP_R19_JStirling\F3r458.rvt

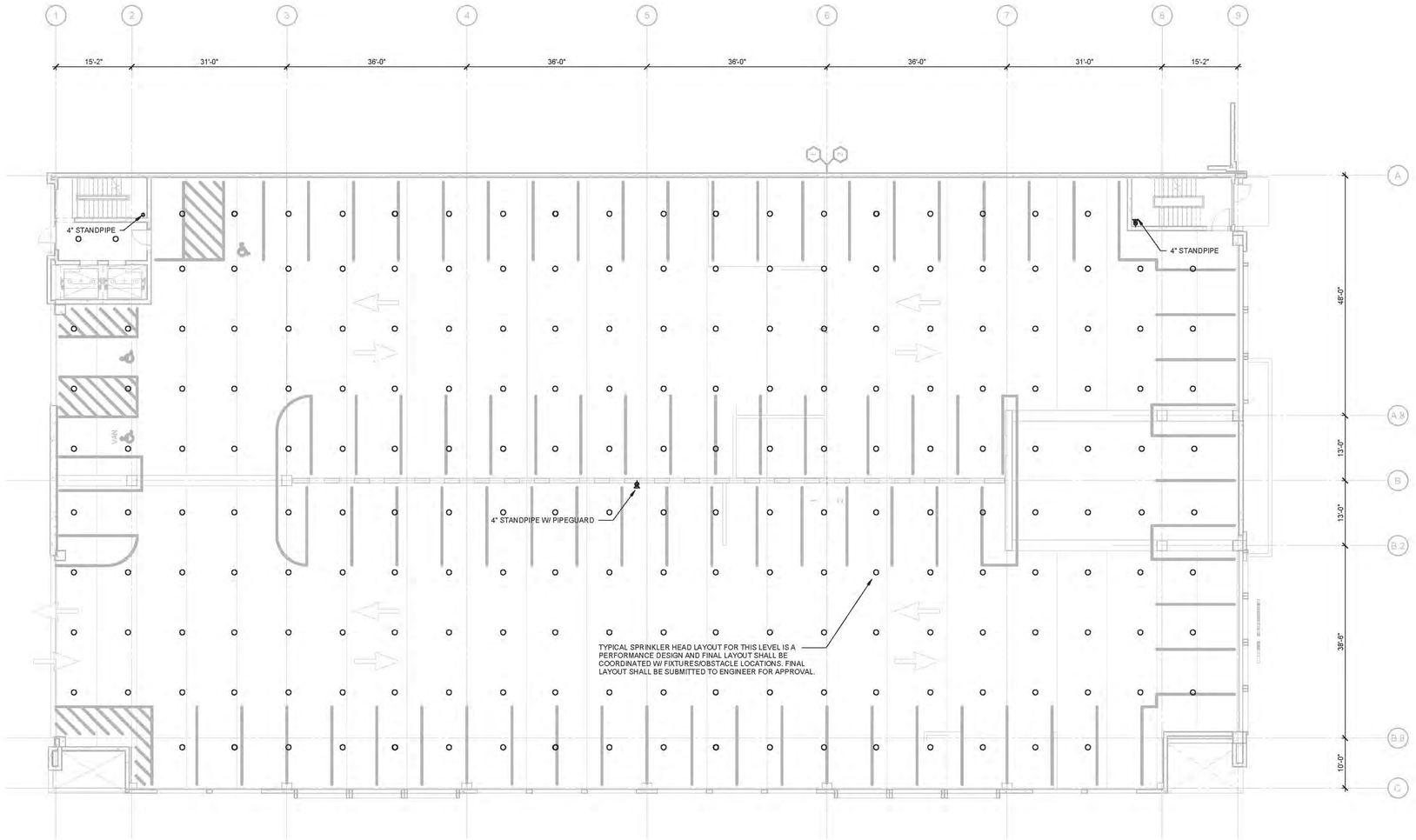

1 SECOND TIER PLAN
3/32" = 1'-0"

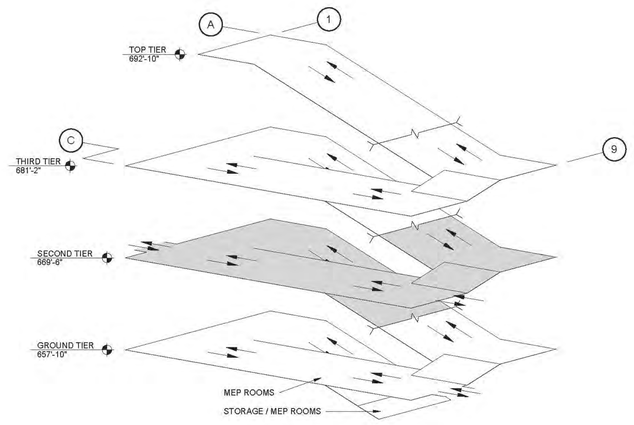

ISOMETRIC

PRELIMINARY - DO NOT USE FOR CONSTRUCTION

PRIME DESIGNER

WALKER CONSULTANTS

2895 Greenspoint Parkway, Suite 600
Hoffman Estates IL 60169
847.697.2640 Ph
www.walkerconsultants.com

ARCHITECTURAL

Studio Level 1

STUDIO LEVEL 1
1001 North Warren Street
Gary, IN 46403
219.951.0214 Ph
www.studiolevel1.com

Mount Prospect

MAPLE STREET
PARKING DECK

MOUNT PROSPECT, IL

MARK	DATE	DESCRIPTION

REVISIONS

SHEET ISSUE:	95% CONSTRUCTION DOCUMENTS
SHEET ISSUE DATE:	10/16/2019
PROJECT NO:	31-8504.00
DRAWN BY:	LF
CHECKED BY:	JDS

COPYRIGHT © 2019. ALL RIGHTS RESERVED. NO PART OF THIS DOCUMENT MAY BE REPRODUCED IN ANY FORM OR BY ANY MEANS WITHOUT PERMISSION FROM WALKER CONSULTANTS.

SHEET TITLE:
SECOND TIER FIRE PROTECTION PLAN

F-102

10/17/2019 9:07:08 AM C:\Revit Projects\31-8504.00-MAPLE STREET PG-MEP_R19_JStirlingF3H58.rvt

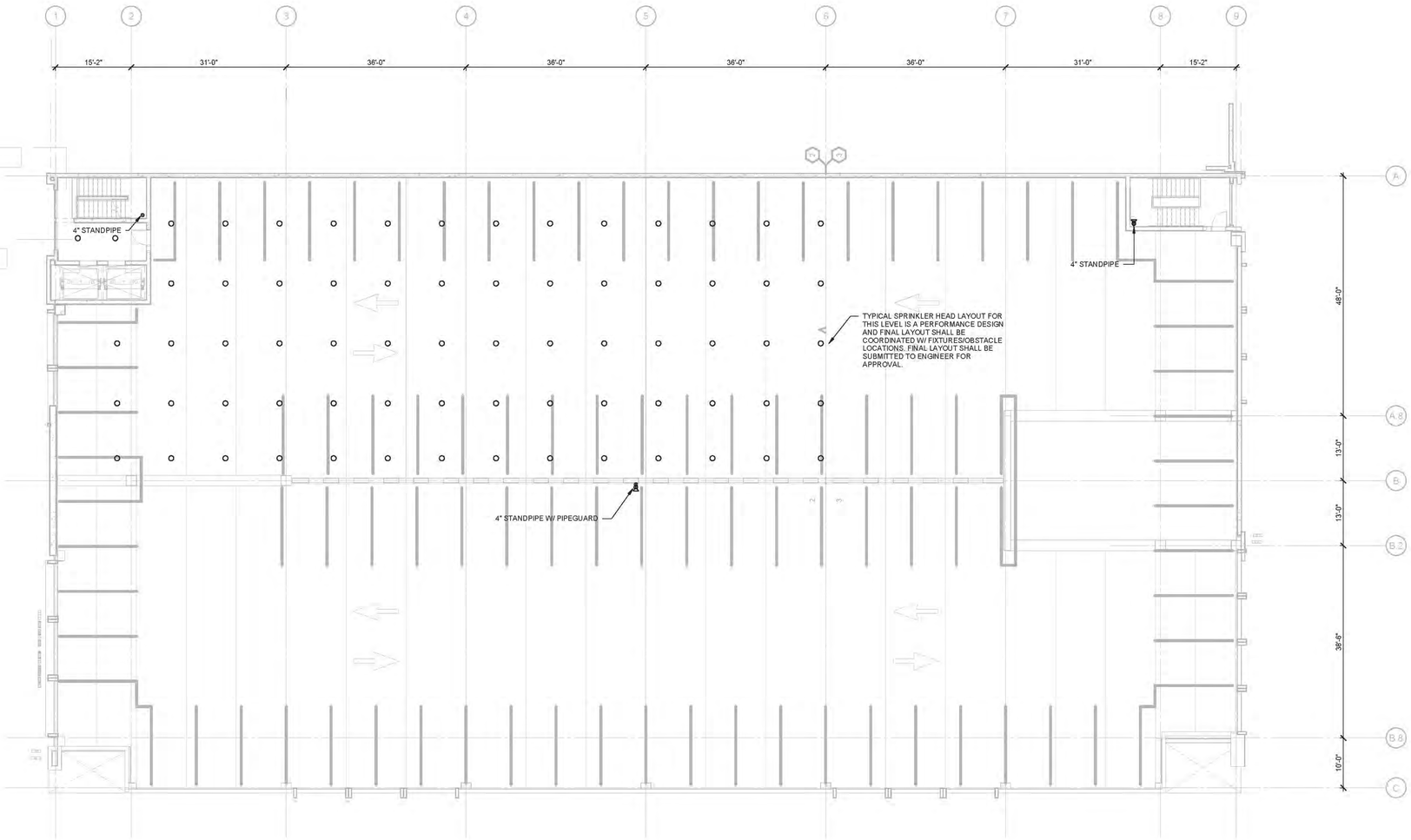

1 THIRD TIER PLAN
3/32" = 1'-0"

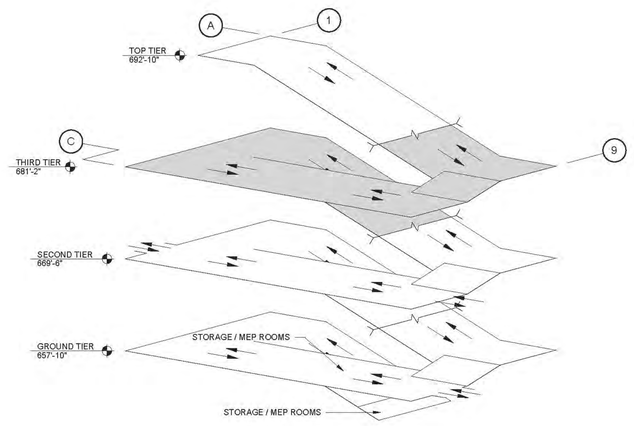

ISOMETRIC

PRELIMINARY - DO NOT USE FOR CONSTRUCTION

PRIME DESIGNER

WALKER CONSULTANTS

2895 Greenspoint Parkway, Suite 600
Hoffman Estates IL 60169
847.697.2640 Ph
www.walkerconsultants.com

ARCHITECTURAL

Studio Level 1

STUDIO LEVEL 1
1001 North Warren Street
Gary, IN 46403
219.951.0214 Ph
www.studiolevel1.com

Mount Prospect

MAPLE STREET
PARKING DECK

MOUNT PROSPECT, IL

MARK	DATE	DESCRIPTION
REVISIONS		
SHEET ISSUE:		95% CONSTRUCTION DOCUMENTS
SHEET ISSUE DATE:		10/18/2019
PROJECT NO:		31-8594.00
DRAWN BY:		LF
CHECKED BY:		JDS

COPYRIGHT © 2019. ALL RIGHTS RESERVED. NO PART OF THIS DOCUMENT MAY BE REPRODUCED IN ANY FORM OR BY ANY MEANS WITHOUT PERMISSION FROM WALKER CONSULTANTS.

SHEET TITLE:
THIRD TIER FIRE PROTECTION PLAN

F-103

10/17/2019 9:07:12 AM C:\Revit Projects\31-8594.00-MAPLE STREET PG-MEP_R19_LStirling-F3HSB.rvt

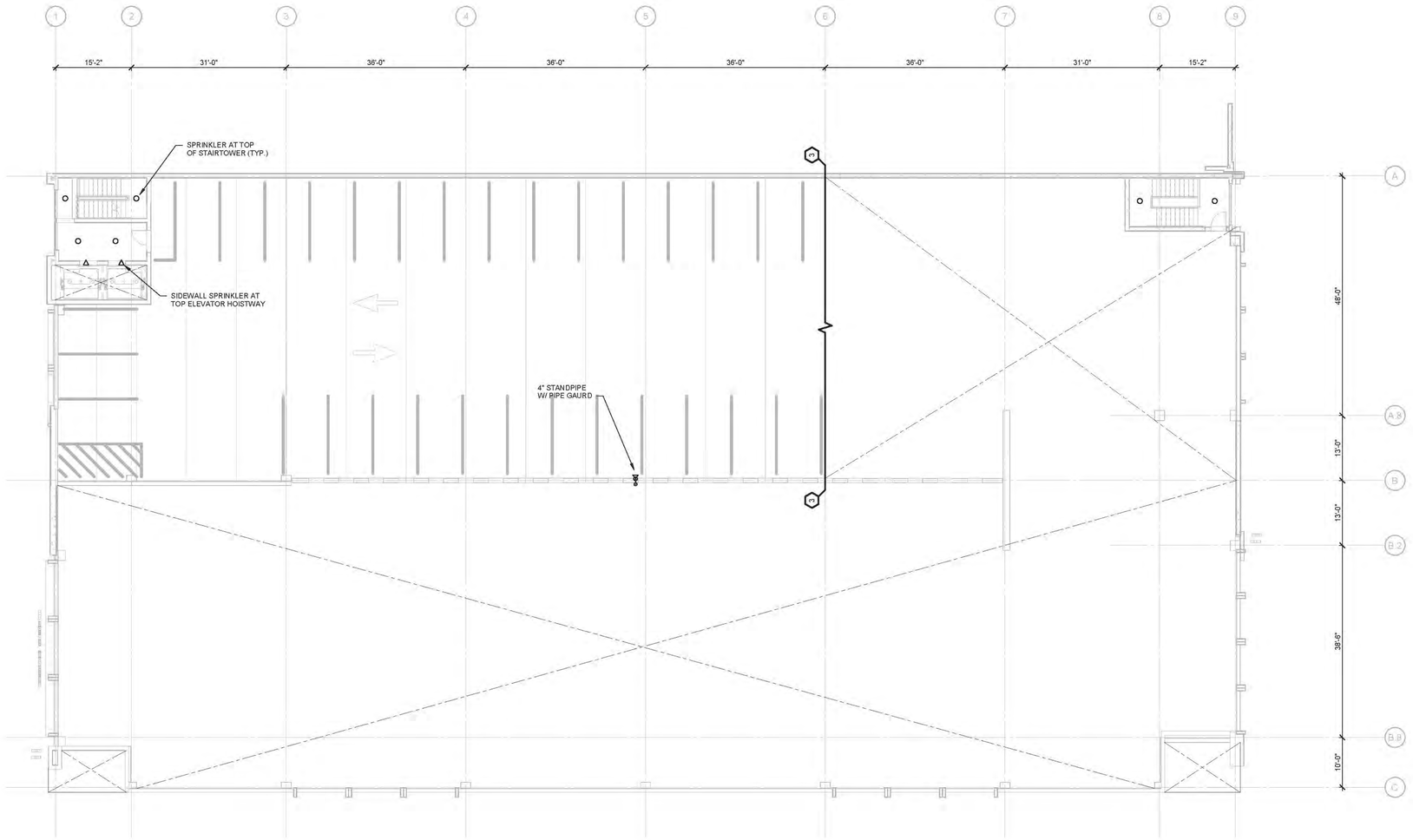

1 TOP TIER PLAN
3/32" = 1'-0"

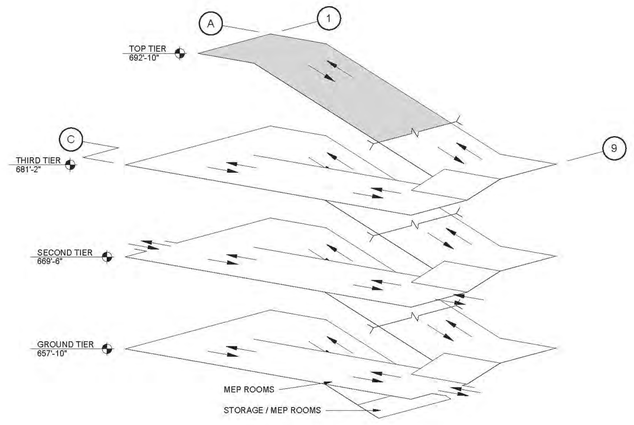

ISOMETRIC

PRELIMINARY - DO NOT USE FOR CONSTRUCTION

PRIME DESIGNER

WALKER CONSULTANTS

2895 Greenspoint Parkway, Suite 600
Hoffman Estates IL 60169
847.697.2640 Ph
www.walkerconsultants.com

ARCHITECTURAL

Studio Level 1

STUDIO LEVEL 1
1001 North Warren Street
Gary, IN 46403
219.951.0214 Ph
www.studiolevel1.com

Mount Prospect

MAPLE STREET
PARKING DECK

MOUNT PROSPECT, IL

MARK	DATE	DESCRIPTION
		REVISIONS

SHEET ISSUE:	95% CONSTRUCTION DOCUMENTS
SHEET ISSUE DATE:	10/16/2019
PROJECT NO:	31-8504.00
DRAWN BY:	LF
CHECKED BY:	JDS

COPYRIGHT © 2019. ALL RIGHTS RESERVED. NO PART OF THIS DOCUMENT MAY BE REPRODUCED IN ANY FORM OR BY ANY MEANS WITHOUT PERMISSION FROM WALKER CONSULTANTS.

SHEET TITLE:
TOP TIER FIRE PROTECTION PLAN

F-104

10/17/2019 9:07:17 AM C:\Revit Projects\31-8504.00-MAPLE STREET PG-MEP_R19_kStirlingF3H5B.rvt

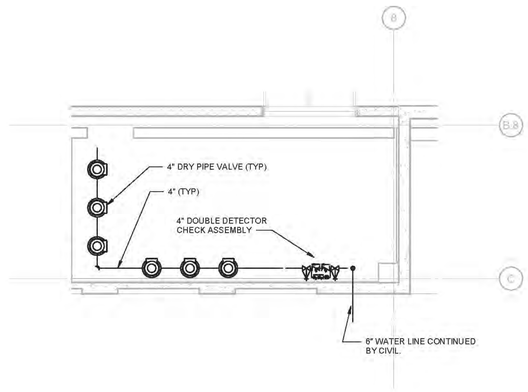

1 ENLARGED FIRE ROOM PLAN
1/4" = 1'-0"

PRELIMINARY - DO NOT USE FOR CONSTRUCTION

PRIME DESIGNER

WALKER CONSULTANTS

2895 Greenspoint Parkway, Suite 600
Hoffman Estates IL 60169
847.697.2640 Ph
www.walkerconsultants.com

ARCHITECTURAL

Studio Level 1

STUDIO LEVEL 1
1001 North Warren Street
Gary, IN 46403
219.951.0214 Ph
www.studiolevel1.com

Mount Prospect

MAPLE STREET
PARKING DECK

MOUNT PROSPECT, IL

MARK	DATE	DESCRIPTION
		REVISIONS
SHEET ISSUE:		95% CONSTRUCTION DOCUMENTS
SHEET ISSUE DATE:		10/16/2019
PROJECT NO:		31-8504.00
DRAWN BY:		LF
CHECKED BY:		JDS

COPYRIGHT © 2019. ALL RIGHTS RESERVED. NO PART OF THIS DOCUMENT MAY BE REPRODUCED IN ANY FORM OR BY ANY MEANS WITHOUT PERMISSION FROM WALKER CONSULTANTS.

SHEET TITLE:
FIRE PROTECTION ENLARGED PLANS

F-401

10/17/2019 9:07:22 AM C:\Revit Projects\31-8504 (00.MAPLE STREET PG-MEP_R19_JStirling\F3458.rvt

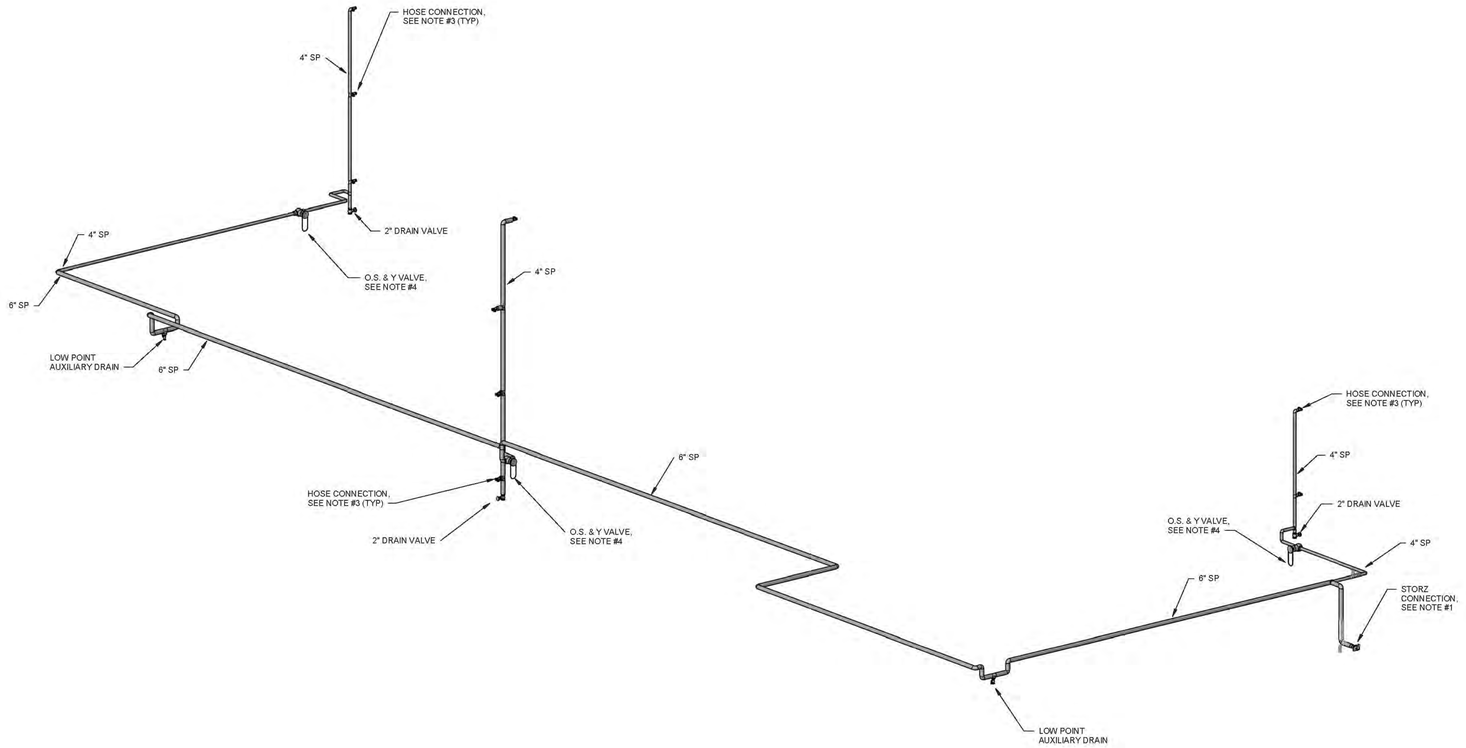

1 STANDPIPE RISER DIAGRAM

SHEET NOTES

1. FIRE DEPARTMENT STORZ CONNECTION 5" STORZ x 6" NPT FEMALE. ELKHART NO. 171. LARGE SIZE FIRE DEPARTMENT CONNECTION WITH PLUG AND CHAIN. ESCUTCHEON LETTERED "STANDPIPE", THREADS TO FIRE DEPARTMENT STANDARD. BEFORE INSTALLATION VERIFY SIZE AND LOCATION WITH LOCAL FIRE OFFICIAL.
2. ALL MATERIALS SHALL BE INSTALLED PER NFPA 14, LOCAL FIRE CODES AND FACTORY MUTUAL REQUIREMENTS. ALL MATERIALS SHALL BE LISTED AND APPROVED BY A RECOGNIZED TESTING AGENCY.
3. HOSE CONNECTIONS: 2 1/2" ANGLE HOSE VALVE. ELKHART NO. U-25-2.5 OR APPROVED EQUIVALENT. THREADS TO FIRE DEPARTMENT STANDARD. PROVIDE 2 1/2" TO 1 1/2" ADAPTOR, CAP AND CHAIN, ROUGH BRASS FINISH. PROVIDE THE FOLLOWING SIGN AT EACH HOSE CONNECTION, "MANUAL DRY STANDPIPE FOR FIRE DEPARTMENT USE ONLY". TYP. U.N.O.
4. 4" DIAMETER O.S. & Y. ISOLATION VALVE LOCKED IN OPEN POSITION.
5. SEE GENERAL NOTES ON SHEET F-001 FOR ADDITIONAL INFORMATION.

PRELIMINARY - DO NOT USE FOR CONSTRUCTION

PRIME DESIGNER
WALKER CONSULTANTS
2895 Greenspoint Parkway, Suite 600
Hoffman Estates IL 60169
847.697.2640 Ph
www.walkerconsultants.com

ARCHITECTURAL
Studio Level 1
STUDIO LEVEL 1
1001 North Warren Street
Gary, IN 46403
219.951.0214 Ph
www.studiolevel1.com

Mount Prospect

MAPLE STREET PARKING DECK

MOUNT PROSPECT, IL

MARK	DATE	DESCRIPTION

REVISIONS

SHEET ISSUE:	95% CONSTRUCTION DOCUMENTS
SHEET ISSUE DATE:	10/16/2019
PROJECT NO:	31-8504.00
DRAWN BY:	LF
CHECKED BY:	JDS

COPYRIGHT © 2019. ALL RIGHTS RESERVED. NO PART OF THIS DOCUMENT MAY BE REPRODUCED IN ANY FORM OR BY ANY MEANS WITHOUT PERMISSION FROM WALKER CONSULTANTS.

SHEET TITLE:
FIRE PROTECTION STANDPIPE RISER DIAGRAMS

F-601

10/17/2019 9:07:29 AM C:\Revit Projects\31-8504.00-MAPLE STREET PG-MEP_R19_JStirling\F3H58.rvt

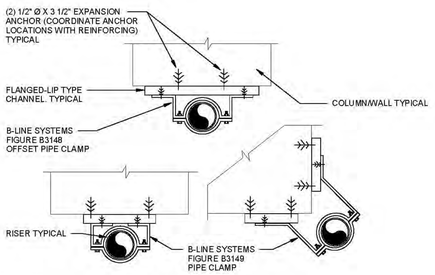

NOTES
1. IF ADDITIONAL DISTANCE FROM COLUMN OR WALL IS REQUIRED OR IF RISER IS MOUNTED AT EDGE OF COLUMN, USE B-LINE SYSTEMS FIGURE B3149 CLAMP, BEND AND DRILL HOLES IN LEGS AS REQUIRED.
2. CHANNEL OR CLAMP ARE NOT TO EXTEND PAST EDGE OF COLUMN OR WALL. IF OUTSIDE DIMENSION OF CLAMP IS GREATER THAN THICKNESS OF WALL OR COLUMN, USE A B-LINE SYSTEMS FIGURE B3149 HANGER, BEND LEGS INWARD AND DRILL HOLES AS REQUIRED.
3. ALL MATERIALS AND HARDWARE SHALL BE HOT DIPPED GALVANIZED OR STAINLESS STEEL.
4. SPECIFY TYPE OF PIPE FOR SIZING PIPE CLAMPS.

1 PIPE SUPPORT DETAIL

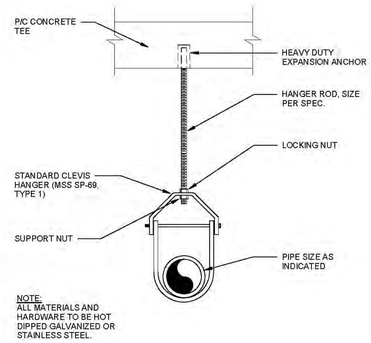

NOTE:
ALL MATERIALS AND HARDWARE TO BE HOT DIPPED GALVANIZED OR STAINLESS STEEL.

2 PIPE HANGER DETAIL

GENERAL NOTES

1. ALL DRAINAGE PIPING SHALL BE SCHEDULE 40 PVC W/ SOLVENT CEMENTED JOINTS. INSTALL EXPANSION FITTINGS IN ALL VERTICAL RISERS AT EVERY LEVEL. SLOPE ALL DRAINAGE PIPING AT 1/8" PER FOOT MINIMUM UNLESS NOTED OTHERWISE.
2. PIPING FOR COLD WATER RISER SHALL BE 2" TYPE "L" COPPER PIPE ABOVE GRADE AND 2" TYPE "K" COPPER PIPE BELOW GRADE. COLD WATER PIPING IS TO BE ROUTED A MINIMUM OF 1'-6" BELOW SLAB ON GRADE. SLOPE AT 1/4" PER 10'-0" MINIMUM TO DRAIN POINTS U.N.O. SYSTEM IS DESIGNED FOR NON POTABLE USE.
3. TOP OF DRAIN GRATE SHALL BE 1/2" BELOW FINISHED FLOOR. TYPICAL FOR ALL DRAINS. SEE STRUCTURAL DRAWINGS FOR FLOOR ELEVATIONS.
4. ALL PIPING AND RISERS EXPOSED TO POSSIBLE BUMPER DAMAGE SHALL BE PROTECTED W/ PIPE GUARDS. SEE STRUCTURAL DRAWINGS.
5. PROVIDE CAST IRON PIPE SLEEVES 2" LARGER THAN PIPE OUTSIDE DIA. AT GRADE SLAB PENETRATIONS. WRAP PIPES W/ 1/2" FIBERGLASS AND SEAL OPENING W/ APPROVED SEALANT. TYPICAL AT GRADE SLAB.
6. PROVIDE 1/3 CU. YD. CONCRETE THRUST BLOCK AT BASE OF ALL RAIN WATER COLLECTORS AND COLD WATER RISERS AND AT ALL BENDS BELOW GRADE. FOR SUPPORT.
7. PIPE HANGERS AND SUPPORTS SHALL BE ARRANGED SO THAT THEY WILL SUSTAIN THE LOADS AND RETAIN THE PIPING SECURELY IN POSITION UNDER FULLY LOADED CONDITIONS. SEE DETAILS 1 & 2/P-001.
8. COORDINATE ALL BLOCK-OUTS REQUIRED W/ GENERAL CONTRACTOR.
9. CLEANOUTS SHALL BE LOCATED AT THE BASE OF ALL DRAINAGE RISERS AND AT OTHER LOCATIONS SHOWN ON THE DRAWINGS. CLEANOUTS AT THE BASE OF RISERS SHALL BE INSTALLED SO THAT THE TOP OF CLEANOUT IS 11" A.F.F. TO CLEAR PIPE GUARD.
10. POWDER PROPELLED FASTENERS PROHIBITED.
11. PROVIDE EXPANSION LOOPS AT ALL LOCATIONS PIPING CROSSES EXPANSION JOINTS.

DRAINAGE SCHEDULE

TYPE	SIZE	MANUFACTURER & CAT. NO.	REMARKS
FD-1	4"	WATTS FD-340-4-5-8-8 OR SMITH EQUIVALENT OR JOSAM EQUIVALENT	12" DIA. HEAVY DUTY CAST IRON DECK DRAIN W/ VANDALPROOF DUCTILE IRON GRATE, SEDIMENT BUCKET & BACKWATER VALVE. (37 SQ. IN. GRATE FREE AREA)
FD-1A	4"	WATTS FD-340-4-5-8-8-SD OR SMITH EQUIVALENT OR JOSAM EQUIVALENT	12" DIA. HEAVY DUTY CAST IRON SIDE OUTLET DECK DRAIN W/ VANDALPROOF DUCTILE IRON GRATE, SEDIMENT BUCKET & BACKWATER VALVE. (37 SQ. IN. GRATE FREE AREA)
FD-2	4"	WATTS FD-900-5-8 OR SMITH EQUIVALENT OR JOSAM EQUIVALENT	12" DIA. HEAVY DUTY CAST IRON DECK DRAIN W/ INTEGRAL FLOOR FLANGE, VANDALPROOF DUCTILE IRON GRATE & SEDIMENT BUCKET. (37 SQ. IN. GRATE FREE AREA)
FD-3	4" OR 6" TO MATCH RISER	WATTS FD-910-5-6 OR SMITH EQUIVALENT OR JOSAM EQUIVALENT	15" DIA. HEAVY DUTY CAST IRON DECK DRAIN W/ INTEGRAL FLOOR FLANGE, VANDALPROOF DUCTILE IRON GRATE & SEDIMENT BUCKET. (61 SQ. IN. GRATE FREE AREA.)
FD-4	4"	WATTS FD-200-DD-5-8 OR SMITH EQUIVALENT OR JOSAM EQUIVALENT	5" DIA. EPOXY COATED CAST IRON FLOOR DRAIN W/ ANCHOR FLANGE, CAST IRON HUB FUNNEL, SEDIMENT BUCKET & BACKWATER VALVE.

PLUMBING ABBREVIATIONS

A.F.F.	ABOVE FINISHED FLOOR	MT.	MOUNT
ARCH.	ARCHITECT (ARCHITECTURAL)	O.S. & Y.	OUTSIDE SCREW & YOKE
BLK.	BLOCK	P/C	PRECAST
C.I.P.	CAST IN PLACE	P.S.I.	POUNDS PER SQUARE INCH
C.O.	CLEANOUT	R.W.C.	RAIN WATER COLLECTOR
CONC.	CONCRETE	SHT.	SHEET
CONN.	CONNECTION	SIM.	SIMILAR
C.W.R.	COLD WATER RISER	S.O.G.	SLAB ON GRADE
D.I.	DUCTILE IRON	SP	STANDPIPE
DET.	DETAIL	SQ. FT.	SQUARE FEET
DIA.	DIAMETER	STRUCT.	STRUCTURAL
F.D.	FLOOR DRAIN	S.V.	SEWER VALVE
GALV.	GALVANIZED	T.D.	TRENCH DRAIN
GEN'L	GENERAL	T.F.A.	TO FLOOR ABOVE
G.P.M.	GALLON PER MINUTE	T.F.B.	TO FLOOR BELOW
INV.	INVERT	TYP.	TYPICAL
M.C.	MECHANICAL CONTRACTOR	U.N.O.	UNLESS NOTED OTHERWISE
M.H.	MANHOLE	W/	WITH

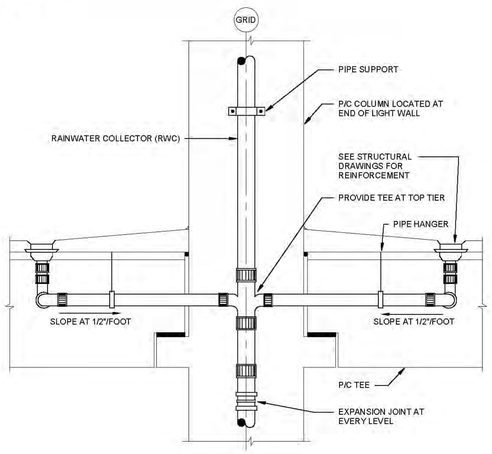

3 TYPICAL DRAINAGE DETAIL FOR SUPPORTED SLAB

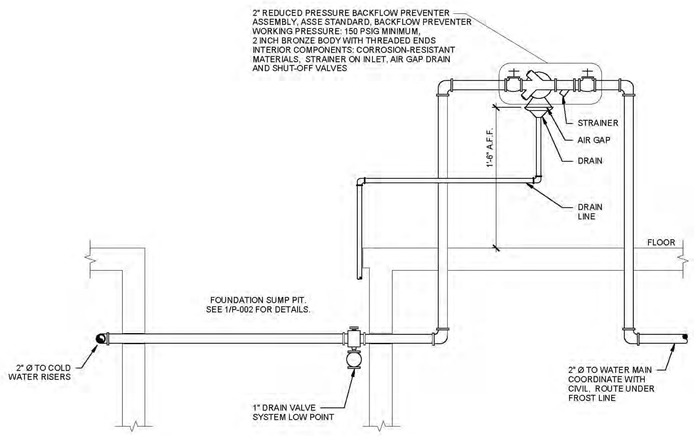

4 COLD WATER DRAIN PIT DETAIL

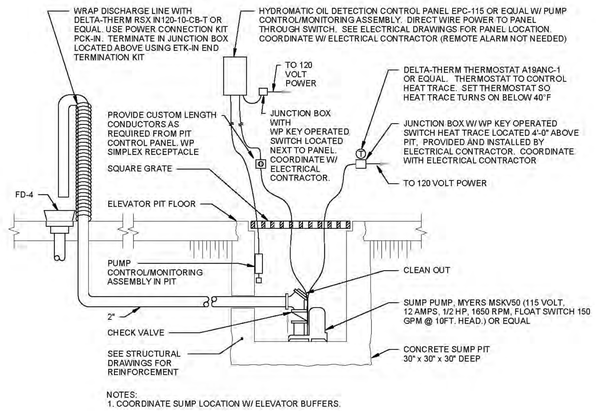

NOTES:
1. COORDINATE SUMP LOCATION W/ ELEVATOR BUFFERS.

5 ELEVATOR SUMP PIT DETAIL

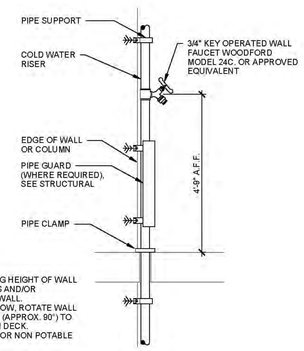

NOTES:
1. COORDINATE MOUNTING HEIGHT OF WALL FAUCET WITH STRANDS AND/OR GUARDRAIL AND LIGHTWALL.
2. WHEN CONDITIONS ALLOW, ROTATE WALL FAUCET CONNECTIONS (APPROX. 90°) TO LIMIT INTERFERENCE IN DECK.
3. SYSTEM IS DESIGNED FOR NON POTABLE USE.

6 TYPICAL COLD WATER FAUCET DETAIL

PLUMBING SYMBOLS

- FLOOR DRAIN
- PLUMBING RISER
- SEWER VALVE
- CLEANOUT
- WALL FAUCET
- OS & Y VALVE
- GATE VALVE
- CHECK VALVE (ARROW INDICATES DIRECTION OF FLOW)
- (M) WATER METER
- ST STORM SEWER LINE
- CS SANITARY LINE
- V VENT LINE
- ARROW INDICATES DIRECTION OF FLOW
- F FOUNDATION DRAINAGE
- W DOMESTIC WATER LINE
- PIPING BELOW GRADE
- PIPING ABOVE GRADE

PRELIMINARY - DO NOT USE FOR CONSTRUCTION

PRIME DESIGNER
WALKER CONSULTANTS
2885 Greenspoint Parkway, Suite 600
Hoffman Estates IL 60169
847.697.2640 Ph
www.walkerconsultants.com

ARCHITECTURAL
Studio Level 1
STUDIO LEVEL 1
1001 North Warren Street
Gary, IN 46403
219.951.0214 Ph
www.studiolevel1.com

Mount Prospect

MAPLE STREET PARKING DECK

MOUNT PROSPECT, IL

MARK	DATE	DESCRIPTION
		REVISIONS

SHEET ISSUE:	95% CONSTRUCTION DOCUMENTS
SHEET ISSUE DATE:	10/18/2019
PROJECT NO:	31-8504.00
DRAWN BY:	JPL
CHECKED BY:	JJJ

COPYRIGHT © 2019. ALL RIGHTS RESERVED. NO PART OF THIS DOCUMENT MAY BE REPRODUCED IN ANY FORM OR BY ANY MEANS WITHOUT PERMISSION FROM WALKER CONSULTANTS.

SHEET TITLE:
GENERAL NOTES, SYMBOLS & ABBREVIATIONS

P-001

10/17/2019 10:19:44 AM C:\Revit Projects\31-8504.00-MAPLE STREET PG-MEP_R19_JJund.rvt

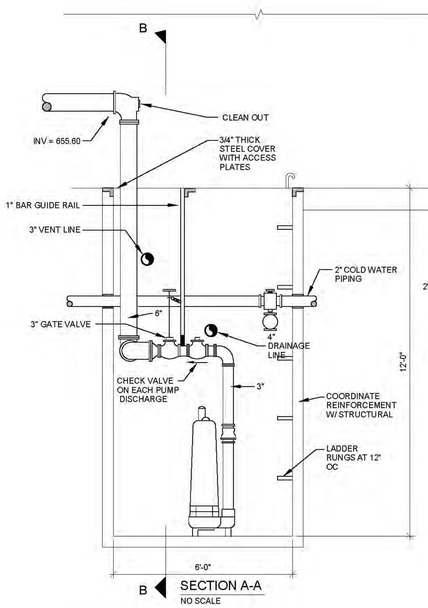

SECTION A-A
NO SCALE

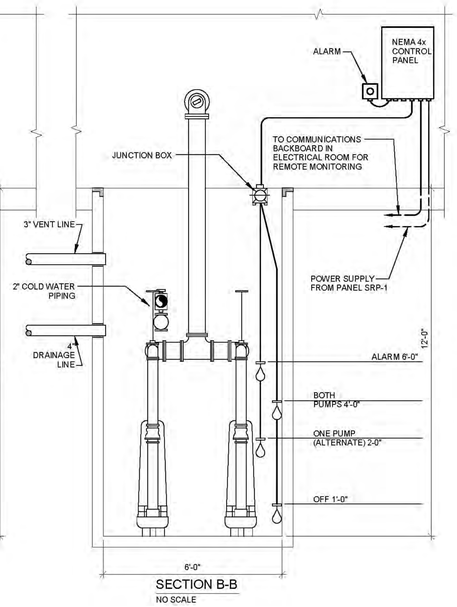

SECTION B-B
NO SCALE

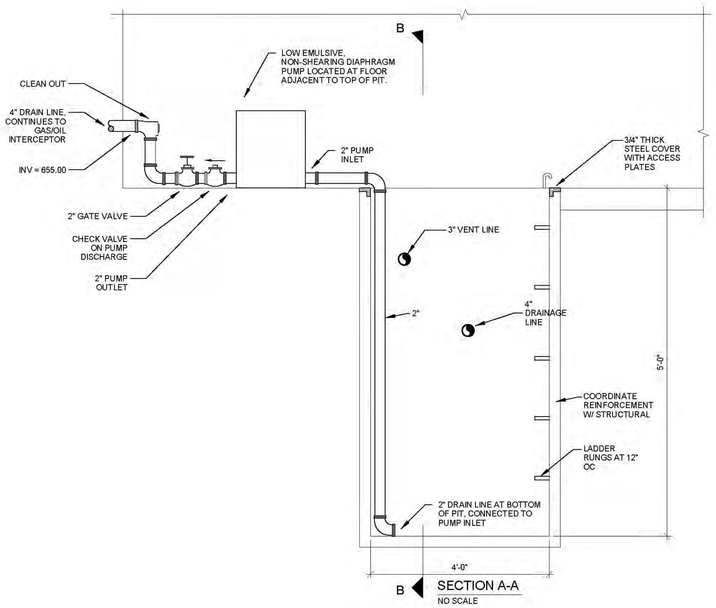

SECTION A-A
NO SCALE

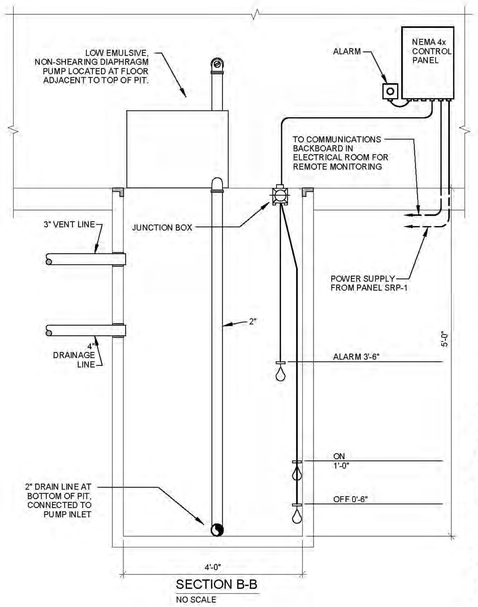

SECTION B-B
NO SCALE

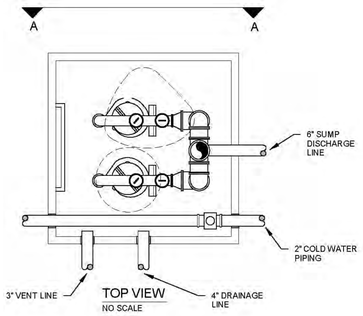

TOP VIEW
NO SCALE

NOTE:
PROVIDE LIFT HOOKS IN CEILING DIRECTLY OVER PUMPS.

SUMP SYSTEM

(2) STANCOR MODEL NUMBER SV-500 5.0 H.P. PUMPS WITH UL LISTED MOTOR, 208 VOLTS, 3 PHASE, 300 GPM AT 10' HEAD EACH, 3" NPT VERTICAL DISCHARGE (1 3/4" CAPACITY SOLIDS HANDLING). W/ NEMA 4x DUPLEX ALTERNATING CONTROL PANEL CONTAINING MOTOR STARTERS, DISCONNECT SWITCHES, HIGH WATER AND PUMP FAILURE ALARMS. PANEL SHALL BE DESIGNED TO CONTROL AND POWER PUMPS FROM A SINGLE 208 VOLT, 3 PHASE CIRCUIT. ALARMS ARE TO BE BOTH AUDIBLE AND HAVE A DRY CONTACT CLOSURE FOR REMOTE MONITORING. PIPE AND FITTINGS TO PUMP ARE TO BE 3". COMBINED DISCHARGE IS TO BE 6". ALL PRESSURIZED LINES SHALL BE TYPE L COPPER.

1 FOUNDATION DRAINAGE SUMP PIT DETAIL

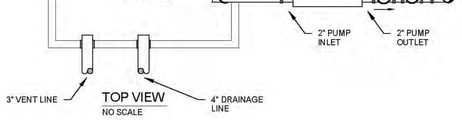

TOP VIEW
NO SCALE

SUMP SYSTEM

ELECTRIC POWERED LOW EMULSIVE, NON-SHEARING 0.75 H.P. DIAPHRAGM PUMP WITH UL LISTED MOTOR AND MOTOR GUARD. 120 VOLTS, 1 PHASE, 15 GPM AT 8' HEAD, 2" NPT DISCHARGE. PROVIDE NEMA 4X CONTROL PANEL AND FLOAT SWITCHES FOR CONTROLLING PUMP. PROVIDE MOTOR STARTERS, DISCONNECT SWITCHES, HIGH WATER AND PUMP FAILURE ALARMS. ALARMS ARE TO BE BOTH AUDIBLE AND HAVE A DRY CONTACT CLOSURE FOR REMOTE MONITORING. PIPE AND FITTINGS TO PUMP ARE TO BE 2".

PUMP

EDSON MODEL NUMBER 120ELB-40-200 W/ 230-A-1299 MOTOR GUARD
OR EQUIVALENT FROM ARO
OR EQUIVALENT FROM NETZSCH

2 SANITARY STORM DRAINAGE SUMP PIT DETAIL

PRELIMINARY - DO NOT USE FOR CONSTRUCTION

PRIME DESIGNER

WALKER CONSULTANTS

2885 Greenspoint Parkway, Suite 600
Hoffman Estates IL 60169
847.697.2640 Ph
www.walkerconsultants.com

ARCHITECTURAL

Studio Level 1

STUDIO LEVEL 1
1001 North Warren Street
Gary, IN 46403
219.951.0214 Ph
www.studiolevel1.com

Mount Prospect

MAPLE STREET PARKING DECK

MOUNT PROSPECT, IL

MARK	DATE	DESCRIPTION
		REVISIONS
SHEET ISSUE:		95% CONSTRUCTION DOCUMENTS
SHEET ISSUE DATE:		10/18/2019
PROJECT NO:		31-8504.00
DRAWN BY:		JPL
CHECKED BY:		JJJ

COPYRIGHT © 2019. ALL RIGHTS RESERVED. NO PART OF THIS DOCUMENT MAY BE REPRODUCED IN ANY FORM OR BY ANY MEANS WITHOUT PERMISSION FROM WALKER CONSULTANTS.

SHEET TITLE:
DETAILS

P-002

10/17/2019 10:19:45 AM C:\Revit Projects\31-8504.00-MAPLE STREET PG-MEP_R19_JJJind.rvt

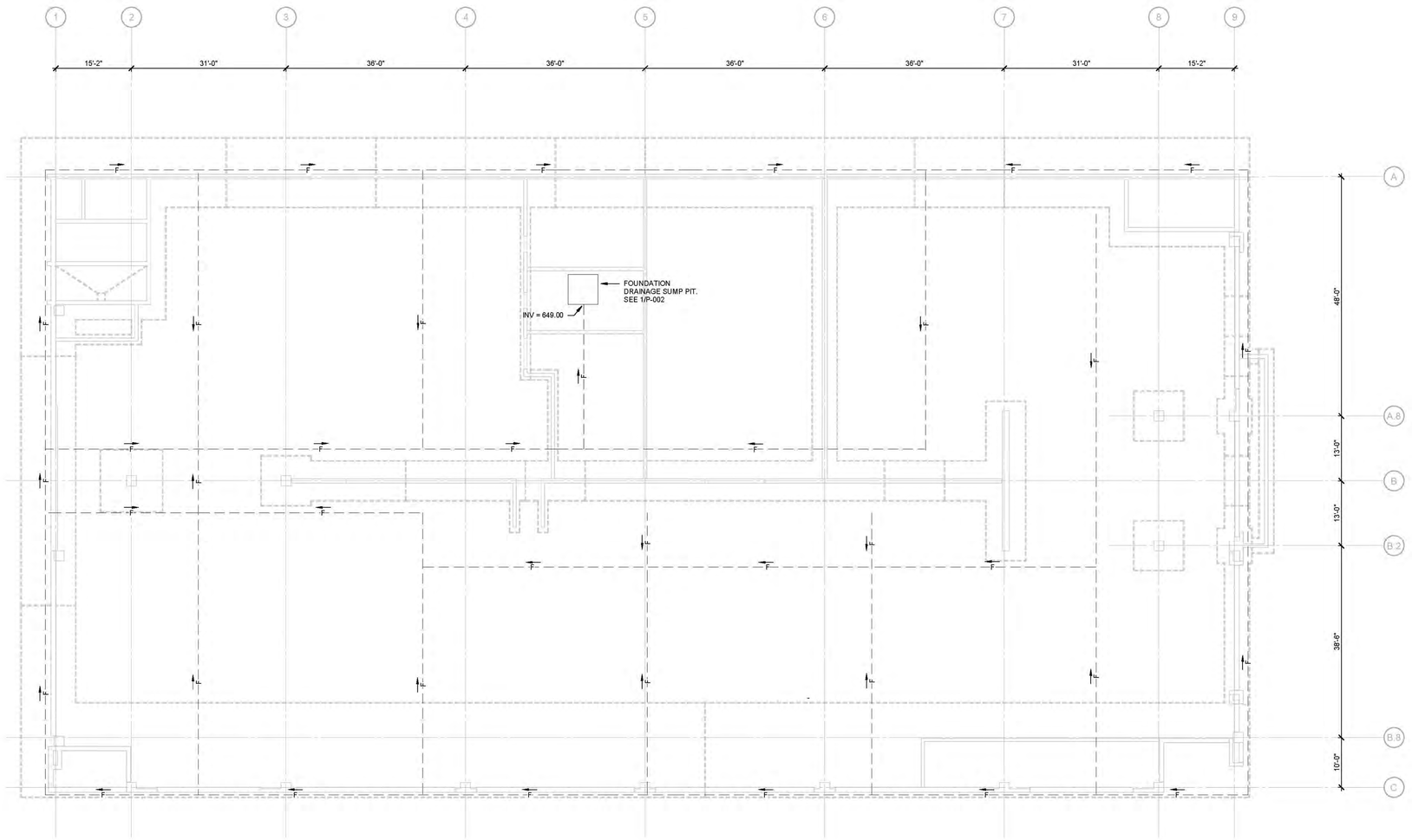

1 FOUNDATION PLAN
3/32" = 1'-0"

UNDERSLAB DRAINAGE NOTES

1. UNDERSLAB DRAINAGE SYSTEM IS TO CONSIST OF 6-INCH THICK LAYER OF FREE DRAINING BASE UNDERLAIN BY DRAINS COMPOSED OF PERFORATED PIPE PLACED IN TRENCHES BACKFILLED WITH FREE-DRAINING GRANULAR MATERIAL. TRENCHES ARE TO EXTEND 12" BELOW THE FLOOR SLAB SUBGRADE AND SHOULD BE SPACED AT A MAXIMUM OF 50'-0" CENTER-TO-CENTER.
2. FOUNDATION AND UNDERSLAB DRAINAGE PIPING IS TO BE POLYETHYLENE PLASTIC CORRUGATED PIPE WITH 1/8" SLOTS, 4" DIA.
3. SLOPE FOUNDATION AND UNDERSLAB DRAINAGE PIPING AT SLIGHT PITCH TO FOUNDATION SUMP PIT.

TRUE NORTH

PRELIMINARY - DO NOT USE FOR CONSTRUCTION

PRIME DESIGNER

WALKER CONSULTANTS

2895 Greenspoint Parkway, Suite 600
Hoffman Estates IL 60169
847.697.2640 Ph
www.walkerconsultants.com

ARCHITECTURAL

Studio Level 1

STUDIO LEVEL 1
1001 North Warren Street
Gary, IN 46403
219.951.0214 Ph
www.studiolevel1.com

Mount Prospect

MAPLE STREET
PARKING DECK

MOUNT PROSPECT, IL

MARK	DATE	DESCRIPTION
		REVISIONS

SHEET ISSUE:	95% CONSTRUCTION DOCUMENTS
SHEET ISSUE DATE:	10/16/2019
PROJECT NO:	31-8504.00
DRAWN BY:	JPL
CHECKED BY:	JJJ

COPYRIGHT © 2019. ALL RIGHTS RESERVED. NO PART OF THIS DOCUMENT MAY BE REPRODUCED IN ANY FORM OR BY ANY MEANS WITHOUT PERMISSION FROM WALKER CONSULTANTS.

SHEET TITLE:
FOUNDATION PLAN

P-100

10/17/2019 10:19:45 AM C:\Revit Projects\31-8504.00-MAPLE STREET PG-MEP_R19_JJJind.rvt

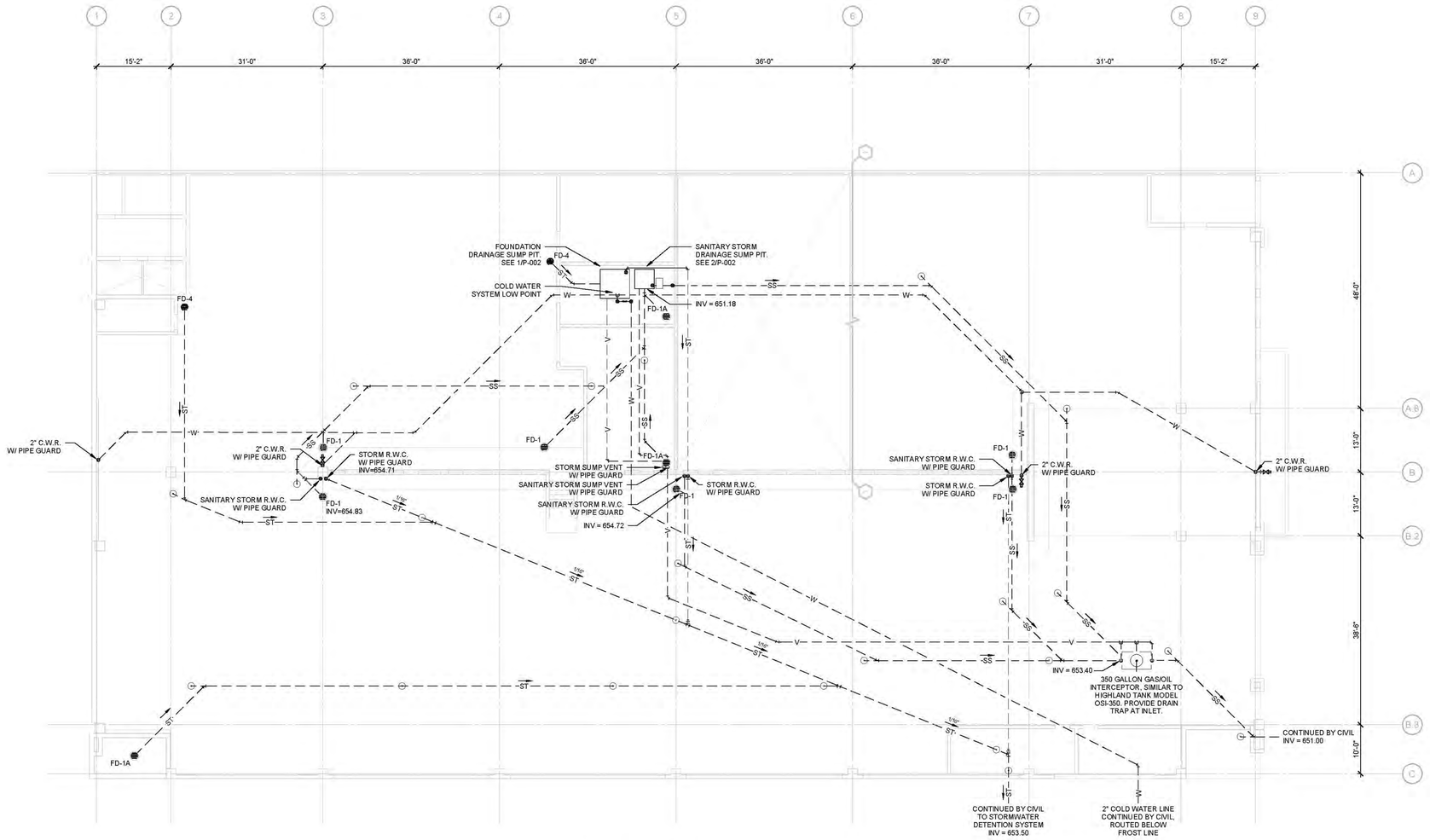

1 GROUND TIER PLAN
3/32" = 1'-0"

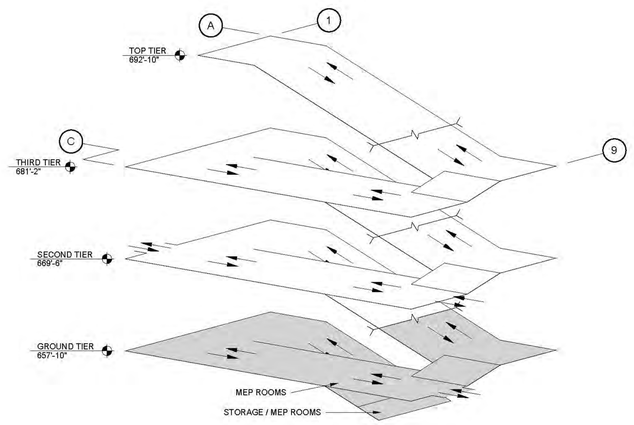

ISOMETRIC

PRELIMINARY - DO NOT USE FOR CONSTRUCTION

PRIME DESIGNER

WALKER CONSULTANTS

2895 Greenspoint Parkway, Suite 600
Hoffman Estates IL 60169
847.697.2640 Ph
www.walkerconsultants.com

ARCHITECTURAL

Studio Level 1

STUDIO LEVEL 1
1001 North Warren Street
Gary, IN 46403
219.951.0214 Ph
www.studiolevel1.com

Mount Prospect

MAPLE STREET
PARKING DECK

MOUNT PROSPECT, IL

MARK	DATE	DESCRIPTION
		REVISIONS

SHEET ISSUE:	95% CONSTRUCTION DOCUMENTS
SHEET ISSUE DATE:	10/18/2019
PROJECT NO:	31-8504.00
DRAWN BY:	JPL
CHECKED BY:	JJJ

COPYRIGHT © 2019. ALL RIGHTS RESERVED. NO PART OF THIS DOCUMENT MAY BE REPRODUCED IN ANY FORM OR BY ANY MEANS WITHOUT PERMISSION FROM WALKER CONSULTANTS.

SHEET TITLE:
GROUND TIER PLAN

P-101

10/17/2019 10:19:46 AM C:\Revit Projects\31-8504.00-MAPLE STREET PG-MEP_R19_JJund.rvt

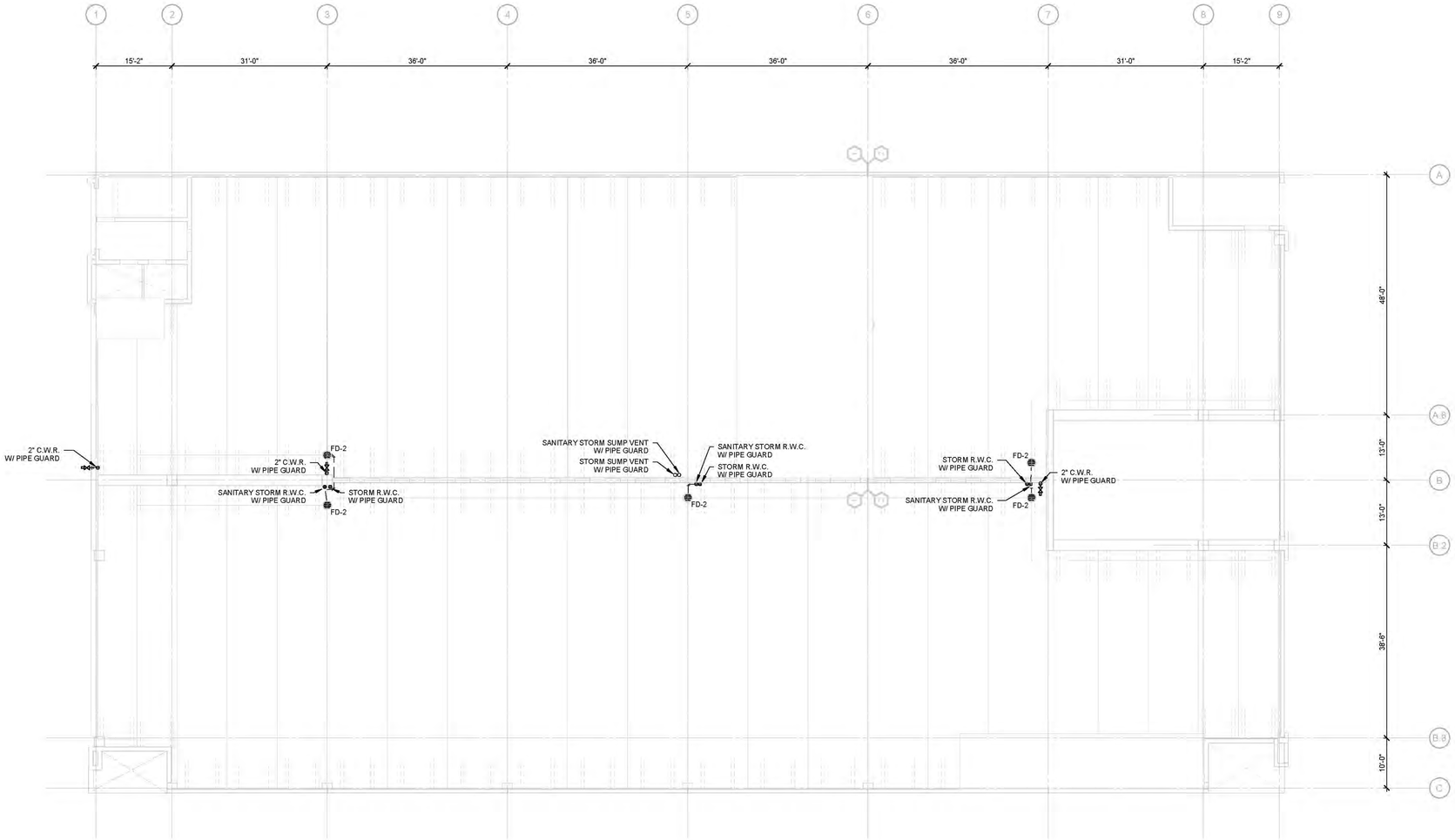

1 SECOND TIER PLAN
3/32" = 1'-0"

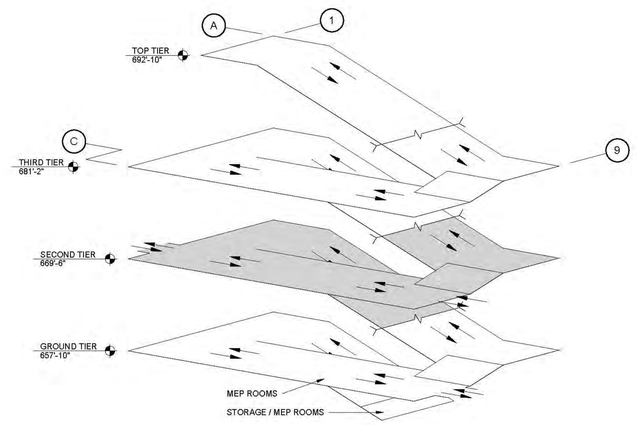

ISOMETRIC

PRELIMINARY - DO NOT USE FOR CONSTRUCTION

PRIME DESIGNER

WALKER CONSULTANTS

2885 Greenspoint Parkway, Suite 600
Hoffman Estates IL 60169
847.697.2640 Ph
www.walkerconsultants.com

ARCHITECTURAL

Studio Level 1

STUDIO LEVEL 1
1001 North Warren Street
Gary, IN 46403
219.951.0214 Ph
www.studiolevel1.com

Mount Prospect

MAPLE STREET
PARKING DECK

MOUNT PROSPECT, IL

MARK	DATE	DESCRIPTION
		REVISIONS

SHEET ISSUE:	95% CONSTRUCTION DOCUMENTS
SHEET ISSUE DATE:	10/16/2019
PROJECT NO:	31-8504.00
DRAWN BY:	JPL
CHECKED BY:	JJJ

COPYRIGHT © 2019. ALL RIGHTS RESERVED. NO PART OF THIS DOCUMENT MAY BE REPRODUCED IN ANY FORM OR BY ANY MEANS WITHOUT PERMISSION FROM WALKER CONSULTANTS.

SHEET TITLE:
SECOND TIER PLAN

P-102

10/17/2019 10:19:47 AM C:\Revit Projects\31-8504.00-MAPLE STREET PG-MEP_R19_JJJmd.rvt

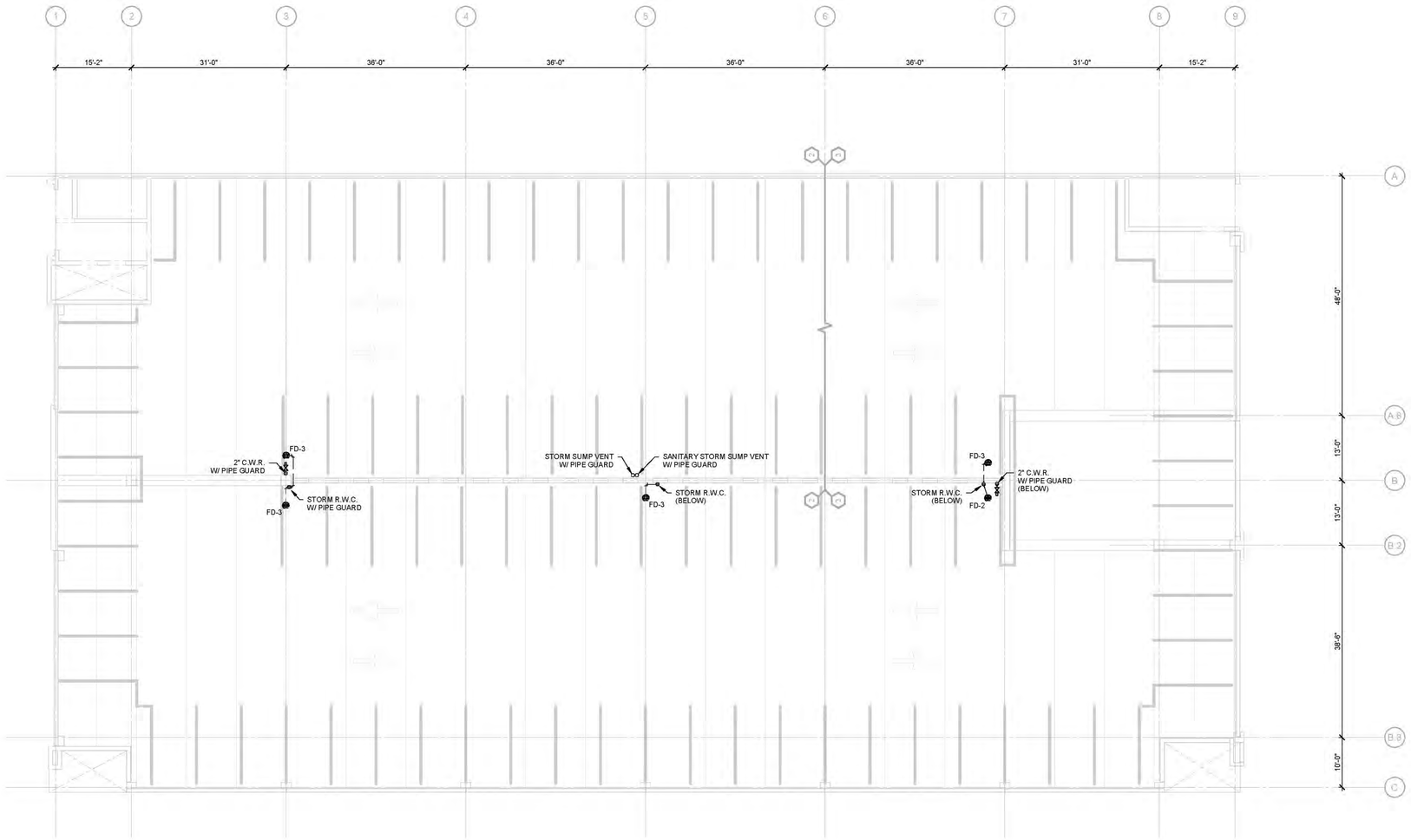

1 THIRD TIER PLAN
3/32" = 1'-0"

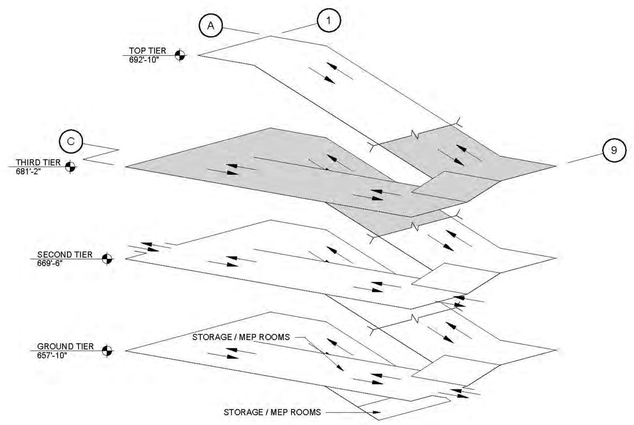

ISOMETRIC

PRELIMINARY - DO NOT USE FOR CONSTRUCTION

PRIME DESIGNER

WALKER CONSULTANTS

2885 Greenspoint Parkway, Suite 600
Hoffman Estates IL 60169
847.697.2640 Ph
www.walkerconsultants.com

ARCHITECTURAL

Studio Level 1

STUDIO LEVEL 1
1001 North Warren Street
Gary, IN 46403
219.951.0214 Ph
www.studiolevel1.com

Mount Prospect

MAPLE STREET
PARKING DECK

MOUNT PROSPECT, IL

MARK	DATE	DESCRIPTION
		REVISIONS

SHEET ISSUE:	95% CONSTRUCTION DOCUMENTS
SHEET ISSUE DATE:	10/16/2019
PROJECT NO:	31-8504.00
DRAWN BY:	JPL
CHECKED BY:	JJJ

COPYRIGHT © 2019. ALL RIGHTS RESERVED. NO PART OF THIS DOCUMENT MAY BE REPRODUCED IN ANY FORM OR BY ANY MEANS WITHOUT PERMISSION FROM WALKER CONSULTANTS.

SHEET TITLE:
THIRD TIER PLAN

P-103

10/17/2019 10:19:48 AM C:\Revit Projects\31-8504.00-MAPLE STREET PG-MEP_R19_JJJmd.rvt

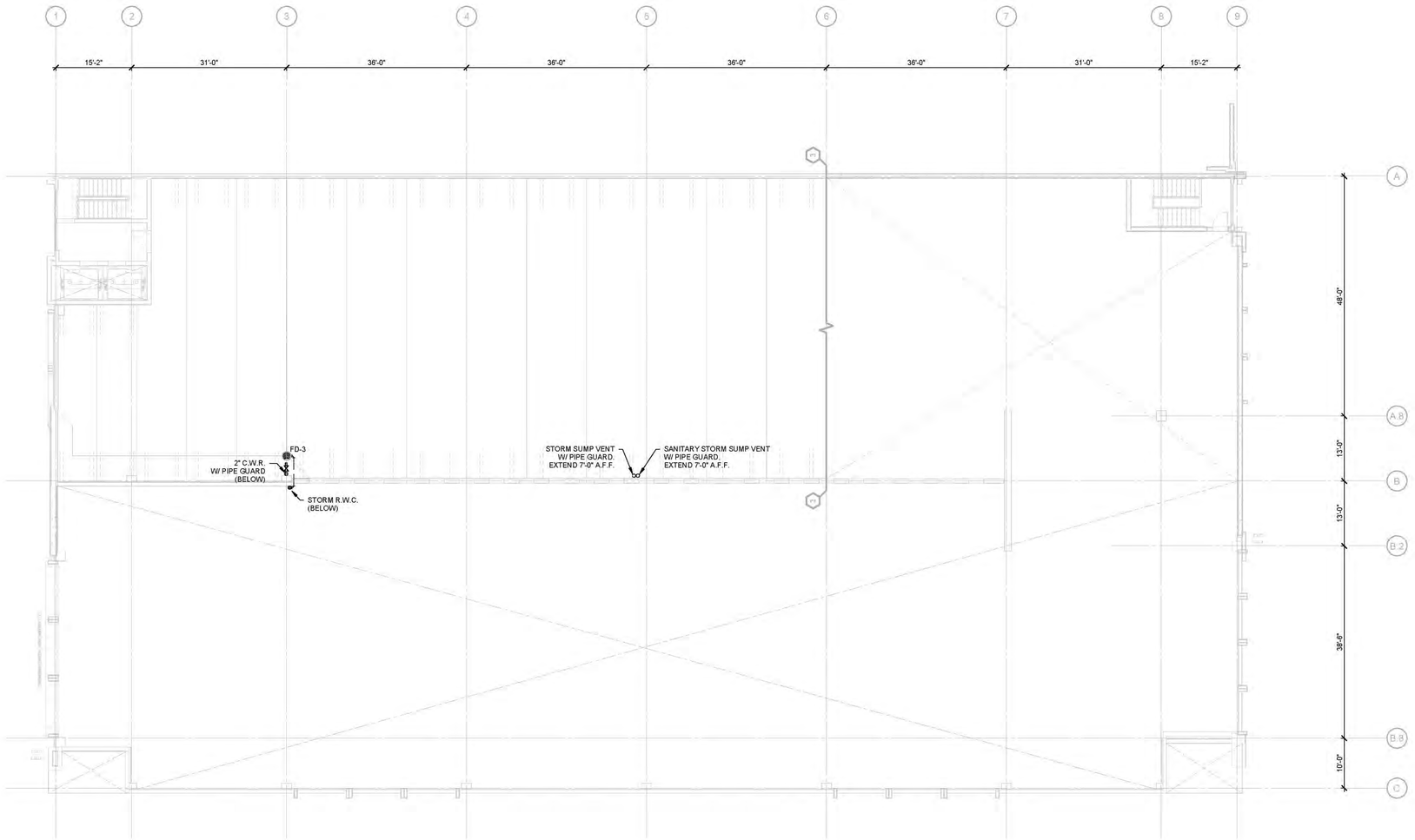

1 TOP TIER PLAN
3/32" = 1'-0"

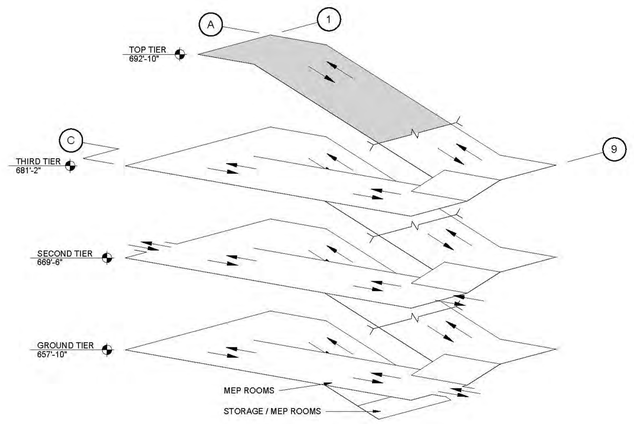

ISOMETRIC

PRELIMINARY - DO NOT USE FOR CONSTRUCTION

PRIME DESIGNER

WALKER CONSULTANTS

2885 Greenspoint Parkway, Suite 600
Hoffman Estates IL 60169
847.697.2640 Ph
www.walkerconsultants.com

ARCHITECTURAL

Studio Level 1

STUDIO LEVEL 1
1001 North Warren Street
Gary, IN 46403
219.951.0214 Ph
www.studiolevel1.com

Mount Prospect

MAPLE STREET
PARKING DECK

MOUNT PROSPECT, IL

MARK	DATE	DESCRIPTION
		REVISIONS

SHEET ISSUE:	95% CONSTRUCTION DOCUMENTS
SHEET ISSUE DATE:	10/16/2019
PROJECT NO:	31-8504.00
DRAWN BY:	JPL
CHECKED BY:	JJJ

COPYRIGHT © 2019. ALL RIGHTS RESERVED. NO PART OF THIS DOCUMENT MAY BE REPRODUCED IN ANY FORM OR BY ANY MEANS WITHOUT PERMISSION FROM WALKER CONSULTANTS.

SHEET TITLE:
TOP TIER PLAN

P-104

10/17/2019 10:19:49 AM C:\Revit Projects\31-8504.00-MAPLE STREET PG-MEP_R19_JJJmd.rvt

SHEET NOTES

1. GPM CALCULATIONS ARE BASED ON A RAINFALL RATE OF 3.25" PER HOUR. COVERED TIER CONTRIBUTIONS FROM WIND BLOWN RAIN ARE BASED ON 50% OF OPEN WALL AREA TIMES THE TOP TIER RATE.
2. CLEANOUTS ARE NOT SHOWN. REFER TO PLAN SHEETS AND SPECIFICATIONS FOR CLEANOUT LOCATIONS.
3. SLOPE ALL DRAINAGE PIPING AT 1/8" PER FOOT MINIMUM UNLESS NOTED OTHERWISE.

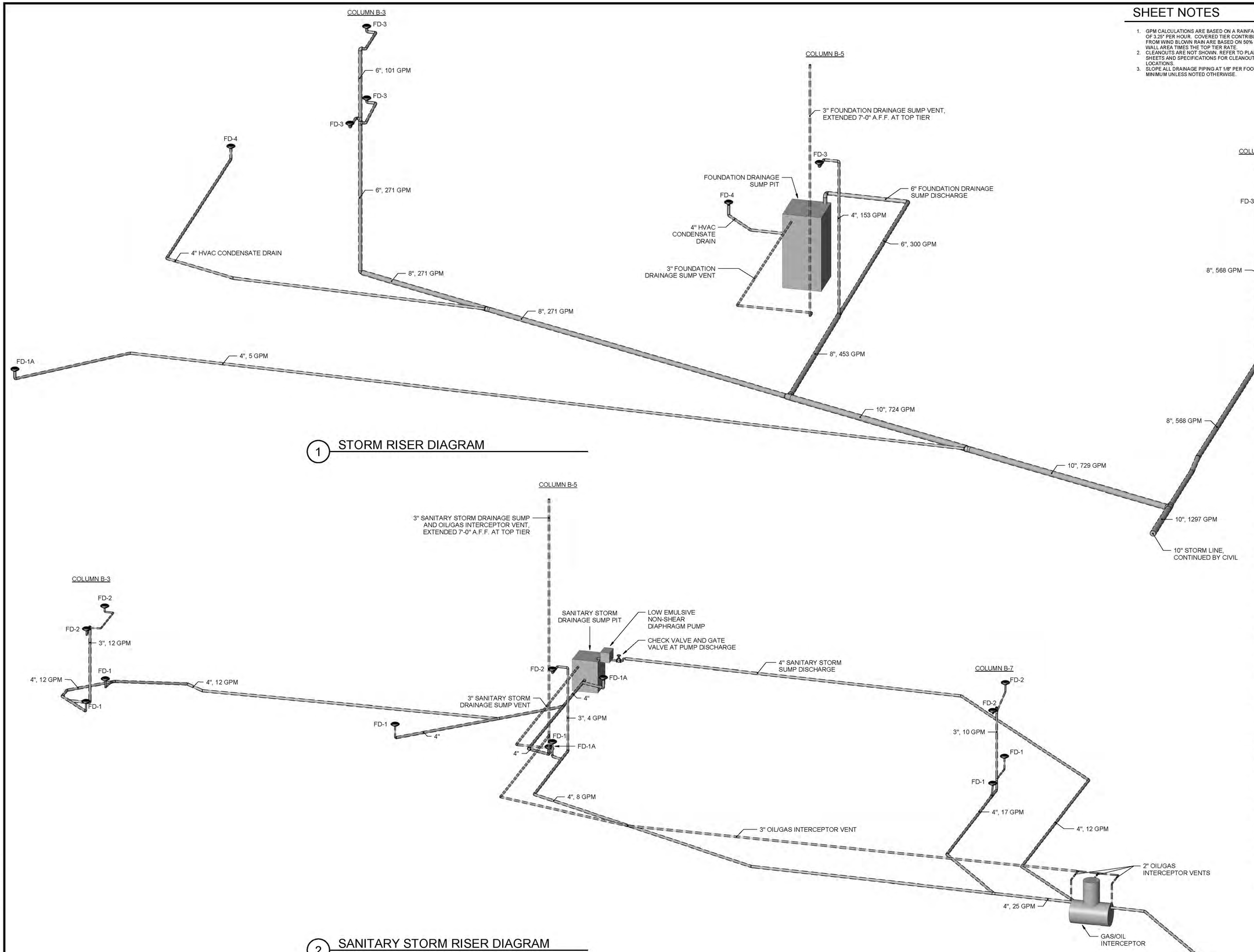

1 STORM RISER DIAGRAM

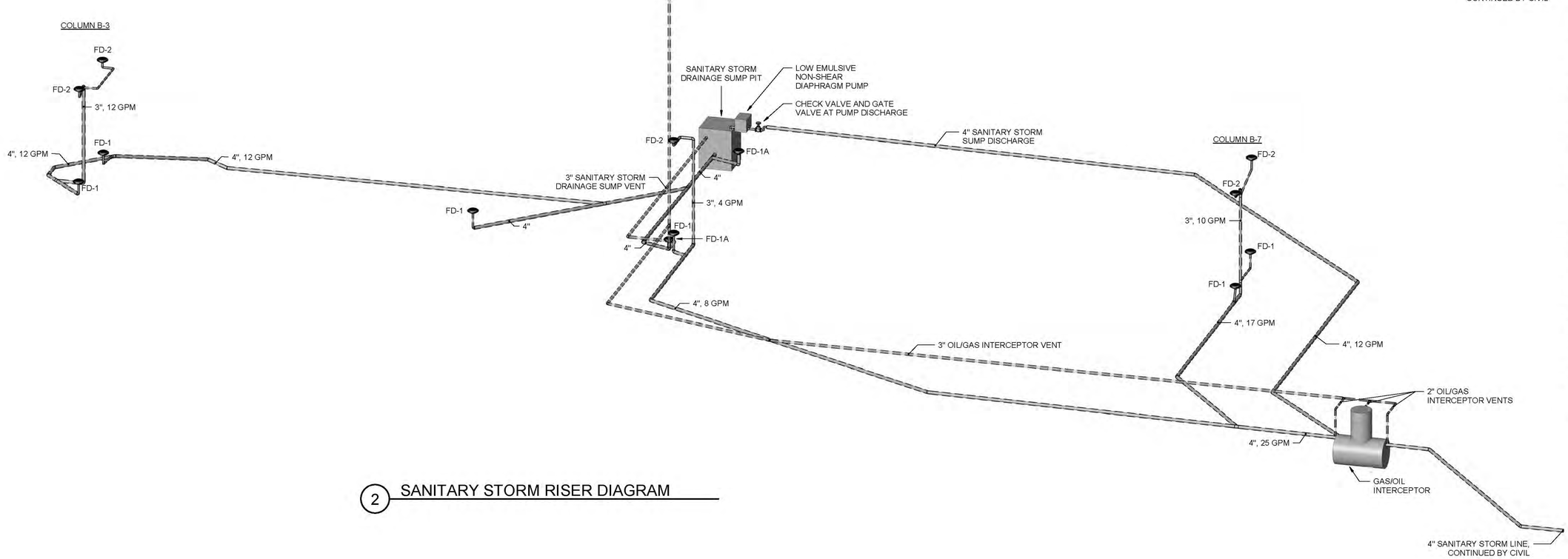

2 SANITARY STORM RISER DIAGRAM

PRELIMINARY - DO NOT USE FOR CONSTRUCTION

PRIME DESIGNER

WALKER CONSULTANTS

2885 Greenspoint Parkway, Suite 600
Hoffman Estates IL 60169
847.697.2640 Ph
www.walkerconsultants.com

ARCHITECTURAL

Studio Level 1

STUDIO LEVEL 1
1001 North Warren Street
Gary, IN 46403
219.951.0214 Ph
www.studiolevel1.com

Mount Prospect

MAPLE STREET
PARKING DECK

MOUNT PROSPECT, IL

MARK	DATE	DESCRIPTION
		REVISIONS

SHEET ISSUE:	95% CONSTRUCTION DOCUMENTS
SHEET ISSUE DATE:	10/18/2019
PROJECT NO:	31-8504.00
DRAWN BY:	JPL
CHECKED BY:	JJJ

COPYRIGHT © 2019. ALL RIGHTS RESERVED. NO PART OF THIS DOCUMENT MAY BE REPRODUCED IN ANY FORM OR BY ANY MEANS WITHOUT PERMISSION FROM WALKER CONSULTANTS.

SHEET TITLE:
DRAINAGE RISER DIAGRAMS

P-601

10/17/2019 10:20:52 AM C:\Revit Projects\31-8504.00-MAPLE STREET PG-MEP_R19_JJJind.rvt

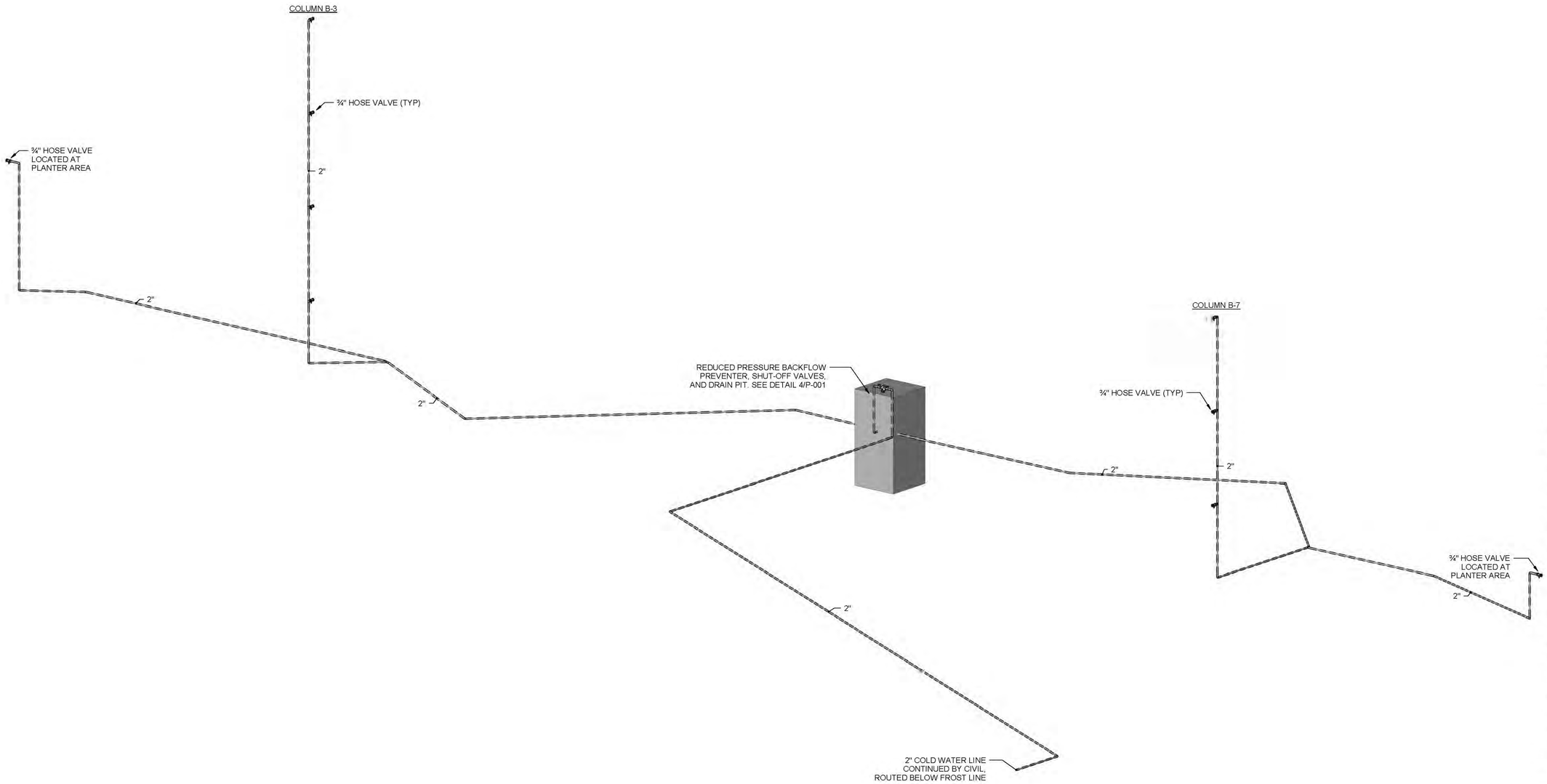

1 COLD WATER RISER DIAGRAM

PRELIMINARY - DO NOT USE FOR CONSTRUCTION

PRIME DESIGNER

WALKER CONSULTANTS

2895 Greenspoint Parkway, Suite 600
Hoffman Estates IL 60169
847.697.2640 Ph
www.walkerconsultants.com

ARCHITECTURAL

Studio Level 1

STUDIO LEVEL 1
1001 North Warren Street
Gary, IN 46403
219.951.0214 Ph
www.studiolevel1.com

Mount Prospect

MAPLE STREET
PARKING DECK

MOUNT PROSPECT, IL

MARK	DATE	DESCRIPTION
		REVISIONS

SHEET ISSUE:	95% CONSTRUCTION DOCUMENTS
SHEET ISSUE DATE:	10/16/2019
PROJECT NO:	31-8504.00
DRAWN BY:	JPL
CHECKED BY:	JJJ

COPYRIGHT © 2019. ALL RIGHTS RESERVED. NO PART OF THIS DOCUMENT MAY BE REPRODUCED IN ANY FORM OR BY ANY MEANS WITHOUT PERMISSION FROM WALKER CONSULTANTS.

SHEET TITLE:
COLD WATER RISER DIAGRAM

P-602

10/17/2019 10:20:56 AM C:\Revit Projects\31-8504.00-MAPLE STREET PG-MEP_R19_JJord.rvt

DUCT-FREE SPLIT SYSTEM DX AIR CONDITIONING/HEAT PUMP UNIT SCHEDULE

INDOOR UNIT TAG	OUTDOOR UNIT TAG	SERVICE	BASIS OF DESIGN		INDOOR UNIT TYPE	REFRIGERANT	COOLING				HEATING (HEAT PUMP)				ELECTRICAL - INDOOR UNIT		ELECTRICAL - OUTDOOR UNIT			PIPING CONNECTIONS (IN)			NOTES
			MFG.	MODEL			CAPACITY (BTU/H)	SEER	EER	AMBIENT AIR TEMP (°F)	CAPACITY (BTU/H)	HSPF	COP	AMBIENT AIR TEMP (°F)	V/PH/HZ	MCA	V/PH/HZ	MCA	MOCP	REFRIG. LIQUID	REFRIG. SUCTION	DRAIN	
AC-1	HP-1	ELEVATOR CONTROL ROOM	CARRIER	INDOOR - 40MAQB OUTDOOR - 38MAR	HIGH WALL	R-410A	18,000	20.0	12.5	NOTE 1	18,000	10.3	1.63	5	208/1/60	0.4	208/1/60	18	25	1/4	1/2	5/8	2, 3, 4, 5
AC-2	HP-2	ELECTRICAL ROOM	CARRIER	INDOOR - 40MAQB OUTDOOR - 38MAR	HIGH WALL	R-410A	18,000	20.0	12.5	NOTE 1	18,000	10.3	1.63	5	208/1/60	0.4	208/1/60	18	25	1/4	1/2	5/8	2, 3, 4, 5

NOTES:

1. SEE 'AIR CONDITIONING DESIGN DATA SCHEDULE' ON THIS SHEET FOR OUTDOOR/AMBEINT VALUES TO BE USED FOR EQUIPMENT SELECTION.
2. PROVIDE INDOOR UNIT WITH CONDENSATE PUMP, HARD WIRED, AUTO-CHANGE OVER THERMOSTAT, AND ALL NECESSARY SUPPORT AND MOUNTING HARDWARE ACCESSORIES.
3. PROVIDE OUTDOOR UNIT WITH LOW AMBIENT CONTROL. SEE 'AIR CONDITIONING DESIGN DATA SCHEDULE' ON THIS SHEET FOR OUTDOOR/AMBEINT VALUES TO BE USED FOR EQUIPMENT SELECTION.
4. INDOOR UNIT POWERED FROM OUTDOOR UNIT.
5. APPROVED EQUIVALENT MANUFACTURERS - TRANE AND DAIKEN.

LOUVER SCHEDULE

TAG	SERVICE	BASIS OF DESIGN		FLOW DIRECTION	WIDTH (IN)	HEIGHT (IN)	DEPTH (IN)	CFM	FREE AREA (SQ FT)	FREE AREA %	FREE AREA VELOCITY (FPM)	PRESSURE DROP (IN W.G.)	WATER PENETRATION VELOCITY (FPM)	NOTES
		MFG.	MODEL											
L-1	ELECTRIC ROOM	GREENHECK	ESD-635-18x18	INLET	18	18	6	600	0.8	36	762	0.09	1250	1, 2, 3, 4
L-2	SPRINKLER ROOM	GREENHECK	ESD-635-14x14	INLET	14	14	6	300	0.4	27	856	0.11	1250	1, 2, 3, 4
L-3	STAIR TOWER A (WEST)	GREENHECK	ESD-635-42x20	INLET	42	20	6	2,000	2.5	44	792	0.10	1250	1, 2, 3, 4
L-4	EMERGENCY GENERATOR ROOM	GREENHECK	ESD-635-36x48	INLET	36	48	6	3300	6.9	58	477	0.03	1250	1, 2, 3, 4
L-5	EMERGENCY GENERATOR ROOM	GREENHECK	ESD-635-36x30	EXHAUST	36	30	6	3300	3.8	51	876	0.10	1250	1, 2, 3, 4
L-6	STORAGE ROOM	GREENHECK	ESD-635-14x14	INLET	14	14	6	300	0.4	27	856	0.11	1250	1, 2, 3, 4
L-7	STAIR TOWER B (EAST)	GREENHECK	ESD-635-30x30	INLET	30	30	6	2,000	3.1	50	648	0.07	1250	1, 2, 3, 4

NOTES:

1. PROVIDE LOUVER WITH ALUMINUM CONSTRUCTION, DRAINABLE HORIZONTAL BLADES, AND INSECT SCREEN.
2. MECHANICAL CONTRACTOR TO PROVIDE MOTOR-OPERATED DAMPER (S), 120/1/60, TO MATCH LOUVER SIZE.
3. COLOR TO BE SELECTED BY ARCHITECT/OWNER.
4. APPROVED EQUIVALENT MANUFACTURERS - RUSKIN AND AWV.

FAN SCHEDULE

TAG	SERVICE	BASIS OF DESIGN		TYPE	CFM	E.S.P. (IN W.G.)	FAN RPM	BHP	DRIVE TYPE	SONES	VFD	ELECTRICAL			NOTES
		MFG.	MODEL									HP	V/PH/HZ	FLA	
EF-1	GARAGE VENT. EXHAUST	GREENHECK	SE2-36-614-B30	SIDEWALL PROPELLER	17,250	0.15	1160	2.73	DIRECT	44	YES	3	208/3/60	-	1, 3, 4, 6
EF-2	ELECTRICAL ROOM	GREENHECK	SE1-14-436-Y6	SIDEWALL PROPELLER	1,500	0.25	1541	0.26	DIRECT	11.1	NO	1/2	120/1/60	6.8	2, 4, 5, 6
EF-3	SPRINKLER ROOM	GREENHECK	SE1-12-432-E	SIDEWALL PROPELLER	300	0.25	1050	0.06	DIRECT	4.9	NO	1/20	120/1/60	-	2, 4, 5, 6
EF-4	STORAGE	GREENHECK	SE1-12-432-E	SIDEWALL PROPELLER	300	0.25	1050	0.06	DIRECT	4.9	NO	1/20	120/1/60	-	2, 4, 5, 6
EF-5	STAIR TOWER(S)	GREENHECK	G-183-VG	ROOF	2,000	0.25	689	0.22	DIRECT	7.0	NO	3/4	120/1/60	10.6	4, 5, 6, 7
JF-1	GARAGE VENT.	SYSTEM AIR	IV SMART EC	JET	1322	-	2607	-	-	-	NO	-	208/1/60	2.8	8

NOTES:

1. SIDEWALL FAN TO BE PROVIDED WITH WALL HOUSING, BACKGAURD, GRAVITY BACKDRAFT DAMPER, AND BIRD SCREEN.
2. SIDEWALL FAN TO BE PROVIDED WITH WALL HOUSING, BACKGAURD, GRAVITY BACKDRAFT DAMPER, AND INSECT SCREEN.
3. MECHANICAL CONTRACTOR SHALL PROVIDE VARIABLE FREQUENCY DRIVE (VFD), FOR INSTALLATION BY THE ELECTRICAL CONTRACTOR.
4. E.S.P. SHOWN IS AT AUDITOR TO MANUFACTURER PROVIDED ACCESSORIES.
5. MECHANICAL CONTRACTOR SHALL PROVIDE THERMOSTAT ADEQUATE TO SUPPORT CONTROL STRATEGY NOTED IN THE 'OPERATION SEQUENCES', THIS SHEET.
6. APPROVED EQUIVALENT MANUFACTURERS - LOREN COOK AND PENNBARRY.
7. ROOFMOUNTED FAN SHALL BE ALUMINUM, LOW-PROFILE CONSTRUCTION. PROVIDE WITH LOW-PROFILE, INSULATED, DOUBLE-WALL, GALVANIZED ROOF CURB, GRAVITY BACKDRAFT DAMPER, AND BIRDSCREEN.
8. JET FAN TO PROVIDE 12N THRUST CAPABILITIES WITH MINIMUM THROW OF 98' AND MINIMUM SPREAD OF 20'. MAXIMUM SOUND PRESSURE LEVEL 64 dBA (@ 3 M).

ELECTRIC UNIT HEATER SCHEDULE

TAG	SERVICE	BASIS OF DESIGN		CAPACITY (BTU/H)	ELECTRICAL			NOTES
		MFG.	MODEL		V/PH/HZ	KW	A	
EUH-1	SPRINKLER ROOM	QMARK	MUH03-71	10,200	208/1/60	3	14.5	1, 2
EUH-2	MECHANICAL ROOM	QMARK	MUH03-71	10,200	208/1/60	3	14.5	1, 2

NOTES:

1. ELECTRIC UNIT HEATER PROVIDED WITH INTEGRAL THERMOSTAT, DISCONNECT SWITCH, AND ALL NECESSARY SUPPORT AND MOUNTING HARDWARE ACCESSORIES.
2. APPROVED EQUIVALENT MANUFACTURERS - CHROMALOX AND MODINE.

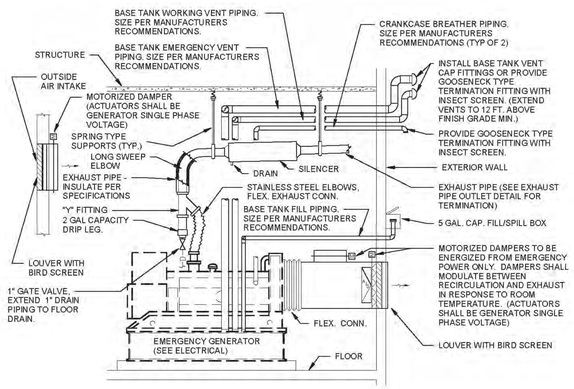

NOTES:

1. SLOPE FILL, VENT, BREATHER, AND EXHAUST PIPING TOWARD GENERATOR.
2. MOTOR-OPERATED DAMPER DIRECTLY ON INTAKE AND EXHAUST LOUVERS SHALL BE FAIL-OPEN SPRING TYPE.
3. THIS DETAIL IS DIAGRAMMATIC AND MAY NOT REFLECT THE EXACT INSTALLATION CONDITIONS.

3 GENERATOR VENTILATION DETAIL
3/4" = 1'-0"

AIR CONDITIONING DESIGN DATA

DESIGN SPACE	SUMMER				WINTER				NOISE LEVEL	REMARKS
	OUTSIDE		INSIDE		OUTSIDE		INSIDE			
	°F db	°F wb	°F db	% REL. HUMID.	°F db	°F wb	°F db	% REL. HUMID.	N.C.	
OUTDOORS	96.9	76.5	-	-	-1.0	-	-	-	-	1, 2
ALL PARKING LEVELS	-	-	-	-	-	-	-	-	-	3
ELEVATOR CONTROL ROOM	-	-	95	95	-	-	45	-	-	4
STAIR TOWER(S)	-	-	-	-	-	-	-	-	-	7
EMERGENCY GENERATOR ROOM	-	-	122	-	-	-	-	-	-	9
ELECTRICAL ROOM	-	-	85	95	-	-	50	-	-	8
STORAGE ROOM	-	-	-	-	-	-	-	-	-	7
SPRINKLER ROOM	-	-	-	-	-	-	45	-	-	5
MECHANICAL ROOM	-	-	-	-	-	-	45	-	-	6

NOTES:

1. OUTDOOR DESIGN CONDITIONS BASED ON ASHRAE EXCEEDANCE DATA AT 0.4% FOR COOLING AND 99.6% FOR HEATING NEARBY AT CHICAGO - O'HARE INT'L AIRPORT.
2. SOUND LEVELS AT ADJACENT AND NEARBY PROPERTY LINES MUST NOT EXCEED 65 dBA DAYTIME / 55 dBA NIGHTTIME.
3. ALL PARKING TIERS ARE VENTILATED, MECHANICALLY OR NATURALLY, WITH NO INSIDE ENVIRONMENTAL TEMPERATURE AND/OR HUMIDITY REQUIREMENTS.
4. HEATING AND COOLING PROVIDED FOR ELEVATOR CONTROL ROOM TO MEET ELEVATOR MANUFACTURER'S REQUIREMENTS.
5. HEATING PROVIDED. HEAT PROVIDED FOR FREEZE PROTECTION OF WATER-FILLED FIRE PROTECTION SYSTEM PIPING LOCATED UPSTREAM OF DRY PIPE VALVE(S).
6. HEATING ONLY PROVIDED.
7. VENTILATION ONLY PROVIDED.
8. HEATING AND COOLING PROVIDED FOR CCTV EQUIPMENT LOCATED WITHIN ELECTRICAL ROOM.
9. VENTILATION ONLY PROVIDED. EMEGENCY GENERATOR WILL BE PROVIDED WITH A CRANKCASE HEATER, ELIMINATING THE NEED TO PROVIDE HEAT IN THE ROOM.

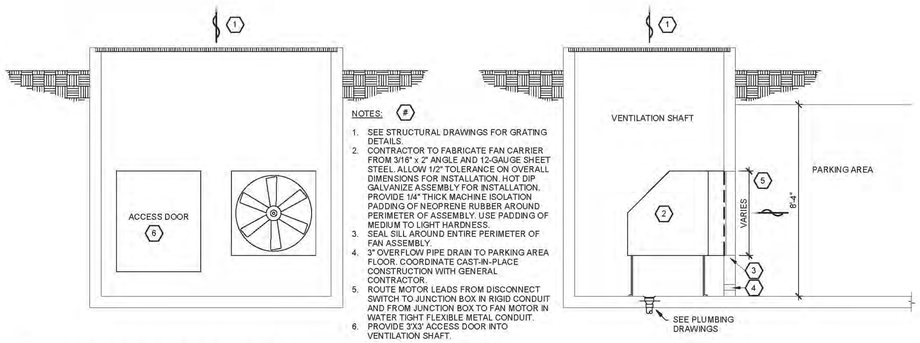

2 VENT SHAFT/FAN DETAIL
3/8" = 1'-0"

GENERAL NOTES

1. CONTRACTOR IS REQUIRED TO PROVIDE OWNER WITH COMPLETE SET OF INSTALLATION, OPERATION AND MAINTENANCE MANUALS FOR MECHANICAL EQUIPMENT.
2. CONTRACTOR IS REQUIRED TO ENSURE THAT THE HVAC SYSTEMS ARE FULLY OPERATIONAL AND THAT THE OWNER RECEIVES ADEQUATE TRAINING AND INSTRUCTION IN THE OPERATION.
3. DUCTWORK SHALL BE FABRICATED AND INSTALLED PER SMACNA STANDARDS AND THE MECHANICAL CODE. PROVIDE DUCT TRANSITIONS AND FITTINGS AS REQUIRED. DUCTS INSTALLED DIFFERENT THAN SIZES SHOWN SHALL HAVE THE SAME OR GREATER EQUIVALENT CROSS-SECTIONAL AREA. DUCT DIMENSIONS SHOWN ARE INSIDE FREE AREA.
4. SEAL JOINTS, LONGITUDINAL AND TRANSVERSE SEAMS WITH HARDCAST IRON GRIP 601, SURE GRIP 404, OR OTHER APPROVED SEALANT. SUPPLY, RETURN AND EXHAUST AIR DUCTWORK SHALL BE SEALED TO SEAL CLASS 'A'.
5. EXPOSED DUCTWORK IN FINISHED SPACES SHALL BE OIL-FREE ("PAINTGRIP") AND SUITABLE FOR PRIMING AND PAINTING.
6. DRAWINGS SHOWING LOCATIONS OF EQUIPMENT, DUCTWORK, PIPING, ETC. ARE DIAGRAMMATIC AND MAY NOT ALWAYS REFLECT EXACT INSTALLATION CONDITIONS. DRAWINGS SHOW THE GENERAL ARRANGEMENT OF DUCTWORK, PIPING, EQUIPMENT, ETC., AND MAY NOT INCLUDE ALL OFFSETS AND FITTINGS REQUIRED FOR COMPLETE INSTALLATION. THE DRAWINGS SHALL BE FOLLOWED AS CLOSELY AS ACTUAL BUILDING CONSTRUCTION AND THE WORK OF OTHERS WILL PERMIT.
7. VERIFY ALL PENETRATIONS LOCATION WITH ARCHITECTURAL AND STRUCTURAL PLANS.
8. DO NOT SCALE DRAWINGS. VERIFY ALL DIMENSIONS AND CLEARANCES FROM ARCHITECTURAL, STRUCTURAL, SUBMITTALS, AND OTHER APPROPRIATE DRAWINGS OR PHYSICALLY AT SITE. REVIEW ALL DRAWINGS, INCLUDING THOSE OF OTHER TRADES.
9. COORDINATE ALL WORK WITH ALL OTHER TRADES PRIOR TO INSTALLATION TO PROVIDE CLEARANCES REQUIRED FOR OPERATION, MAINTENANCE, CODE COMPLIANCE, AND TO VERIFY NON-INTERFERENCE WITH OTHER WORK. DO NOT FABRICATE PRIOR TO VERIFICATION OF NECESSARY CLEARANCES FOR ALL TRADES. BRING ANY INTERFERENCES OR CONFLICTS TO THE ATTENTION OF THE ARCHITECT/ENGINEER BEFORE PROCEEDING WITH FABRICATION OR EQUIPMENT ORDERS. REVIEW SPACE REQUIREMENTS OF EQUIPMENT SPECIFIED OR SUBSTITUTED AND MAKE REASONABLE ACCOMMODATIONS IN LAYOUT AND POSITIONING TO PROVIDE PROPER ACCESS. ANY CHANGES REQUIRED TO ELIMINATE CONFLICTS OR THAT RESULT FROM A FAILURE TO COORDINATE SHALL BE MADE BY THE CONTRACTOR WITHOUT ADDITIONAL COST OR EXPENSE TO OTHERS.
10. EACH CONTRACTOR IS RESPONSIBLE FOR ALL COSTS ASSOCIATED WITH ELECTRICAL CHANGES REQUIRED FOR EQUIPMENT PROPOSED THAT DIFFERS FROM THE BASIS OF DESIGN.
11. SEAL ALL FLOOR, WALL, AND ROOF PENETRATIONS AIRTIGHT WHERE PIPING, AND DUCTS PENETRATE. PENETRATIONS THROUGH EXTERIOR WALLS AND ROOF SHALL BE SEALED AIRTIGHT WITH WATERPROOFING MATERIALS RECOMMENDED BY MANUFACTURER FOR OUTDOOR USE. PROVIDE 16 GAUGE SLEEVE AT EACH PENETRATION, INSTALLED PER SMACNA STANDARDS.. PATCH PENETRATIONS TO MATCH EXISTING AND FIRE STOP PENETRATIONS WHERE REQUIRED TO MAINTAIN FIRE SEPARATION INTEGRITY USING U.L. LISTED MATERIAL.
12. EQUIPMENT SIZES AND SERVICE CLEARANCE REQUIREMENTS VARY BETWEEN DIFFERENT MANUFACTURERS. CONSULT APPROVED SHOP DRAWINGS FOR EQUIPMENT SIZES AND REQUIRED SERVICE CLEARANCES. COORDINATE WITH LAYOUT OF EQUIPMENT, PADS, PIPING, DUCTWORK, ETC.
13. PROVIDE CONCRETE EQUIPMENT PAD FOR ALL FLOOR MOUNTED EQUIPMENT. PAD SHALL EXTEND MINIMUM 6" BEYOND ALL SIDES OF EQUIPMENT.
14. ISOLATE AIR MOVING EQUIPMENT WITH SPRING OR NEOPRENE HANGING VIBRATION ISOLATORS AND WITH FLEXIBLE CANVAS CONNECTIONS TO DUCTWORK.
15. TEST AND BALANCE AIR DISTRIBUTION SYSTEM WITHIN 10% OF CFM INDICATED ON DRAWINGS. PROVIDE CERTIFIED REPORT BY INDEPENDENT, CERTIFIED TEST AND BALANCE CONTRACTOR.
16. ALL AIR CONDITIONING EQUIPMENT CONDENSATE DRAINS SHALL BE PIPED WITH AN INDIRECT CONNECTION TO A NEARBY FLOOR DRAIN. CONDENSATE DRAIN LINE SHALL BE SUFFICIENTLY TRAPPED WITH A MINIMUM 3" TRAP SEAL. CONTRACTOR SHALL CONFIRM IF EQUIPMENT IS INTERNALLY TRAPPED PRIOR TO INSTALLING A TRAP EXTERNAL TO THE EQUIPMENT.
17. PROVIDE SHEET METAL COLLAR AT EACH PENETRATION.
18. COORDINATE THERMOSTAT AND SENSOR LOCATIONS WITH ELECTRICAL CONTRACTOR.
19. CONTRACTOR SHALL ENSURE 8'-2" HEADROOM CLEARANCE IS MAINTAINED THROUGHOUT PARKING GARAGE AREA WHERE ANY MECHANICAL-SCOPE ITEMS ARE INSTALLED. THE ARCHITECT/ENGINEER OF RECORD SHALL BE NOTIFIED AS SOON AS POSSIBLE IF ANY CONFLICTS ARISE.
20. ALL EQUIPMENT SELECTIONS THROUGHOUT ARE BASED ON ROOMS. CONTAINING EITHER HEATING OR COOLING EQUIPMENT, THAT HAVE A THERMAL ENVELOPE IN ACCORDANCE WITH THE 2012 VIRGINIA ENERGY CONSERVATION CODE (VIA ASHRAE 90.1-2010); CLIMATE ZONE 4A. THE ARCHITECT/ENGINEER OF RECORD SHALL BE NOTIFIED AS SOON AS POSSIBLE IF THE FOLLOWING MINIMUM INSULATION REQUIREMENTS ARE NOT MET:
    A. ROOF: INSULATION ENTIRELY ABOVE DECK - R-30 CONTINUOUS INSULATION
    B. MASS WALL, ABOVE GRADE - R-11.4 CONTINUOUS INSULATION
    C. STEEL-FRAMED WALL, ABOVE GRADE - R-13 BETWEEN STUDS PLUS R-10 CONTINUOUS INSULATION
    D. WALL, BELOW GRADE - R-7.5 CONTINUOUS INSULATION
    E. MASS FLOOR/CEILING - R-14.6 CONTINUOUS INSULATION
    F. SLAB-ON-GRADE FLOORS - R-15.0 FOR 24"
    G. SWINGING DOORS - U-0.37
    H. FENESTRATION:
        a. METAL FRAMING, FIXED:
            - U-0.38
            - MAX SHGC - 0.38
            - MIN VT/SHGC - 1.10
        b. METAL FRAMING, ENTRANCE DOOR:
            - U-0.68
            - MAX SHGC - 0.38
            - MIN VT/SHGC - 1.10

APPLICABLE CODES

1. 2015 INTERNATIONAL BUILDING CODE
2. 2015 INTERNATIONAL MECHANICAL CODE
3. 2018 ILLINOIS ENERGY CONSERVATION CODE

OPERATION SEQUENCES

BUILDING AUTOMATION SYSTEM (BAS)

THE BAS SHALL MONITOR THE FOLLOWING:

1. ELEVATOR SUMP PUMP(S) STATUS & ALARM
2. STORM WATER DRAIN PUMP(S) STATUS & ALARM
3. FOUNDATION/SUB-SOIL WATER DRAIN PUMP(S) STATUS & ALARM
4. ELEVATOR CONTROL ROOM TEMPERATURE
5. HEAT TRACING ALARM
6. EMERGENCY GENERATOR STATUS AND ALARM

ALL POINTS SHALL TERMINATE IN THE 'ELECTRICAL ROOM'. REFER TO SPECIFICATIONS FOR ADDITIONAL INFORMATION.

GARAGE VENTILATION

1. REFER TO SPECIFICATION SECTION 283112.10 FOR CO/NO2 MONITORING CONTROL SYSTEM REQUIREMENTS.

STAIR TOWER(S)

1. INTAKE LOUVER MOTOR-OPERATED DAMPER SHALL OPEN AND EXHAUST FAN START WHEN AMBIENT AIR TEMPERATURE IS GREATER THAN 75°F (ADJUSTABLE). OPERATION SHALL BE REVERSED WHEN STAIR TOWER AMBIENT TEMPERATURE IS LESS THAN 75°F (ADJUSTABLE).

SPRINKLER ROOM

1. WHEN SPACE TEMPERATURE SENSED BY TEMPERATURE SENSOR IS AT OR ABOVE THE ROOM'S SUMMER DESIGN TEMPERATURE, OUTSIDE AIR DAMPER OPENS, EXHAUST FAN STARTS. WHEN TEMPERATURE FALLS TO 10°F (ADJUSTABLE) BELOW SUMMER DESIGN TEMPERATURE, FAN STOPS AND OUTSIDE AIR DAMPER CLOSES.
2. WHEN SPACE TEMPERATURE SENSED BY TEMPERATURE SENSOR FALLS BELOW WINTER DESIGN TEMPERATURE, UNIT HEATER SHALL BE ENERGIZED AND CYCLE TO MAINTAIN SETPOINT. WHEN TEMPERATURE RISES 10°F (ADJUSTABLE) ABOVE SETPOINT, UNIT HEATER DE-ENERGIZES.
3. SYSTEM IN "OFF" POSITION: FAN IS OFF. OUTSIDE AIR DAMPER IS CLOSED. UNIT HEATER IS DE-ENERGIZED.

EMERGENCY GENERATOR ROOM

1. EMERGENCY GENERATOR SHALL BE INTERLOCKED WITH OUTSIDE AIR INTAKE DAMPER(S). WHEN EMERGENCY GENERATOR IS ENERGIZED OUTSIDE AIR INTAKE DAMPER(S) SHALL OPEN. WHEN EMERGENCY GENERATOR IS DE-ENERGIZED OUTSIDE AIR INTAKE DAMPER(S) SHALL CLOSE.

ELEVATOR CONTROL ROOM

1. SPLIT SYSTEM UNIT SHALL CYCLE TO MAINTAIN HEATING/COOLING SETPOINTS. ON A CALL FOR COOLING, COMPRESSORS WILL CYCLE TO MAINTAIN COOLING SETPOINT. ON A CALL FOR HEATING, HEAT PUMP REVERSE CYCLE SHALL OPERATE TO MAINTAIN HEATING SETPOINT. SET THERMOSTAT AND HUMIDISTAT TO MAINTAIN TEMPERATURE BETWEEN SETPOINTS AND HUMIDITY BELOW 85%.

ELECTRICAL ROOM

1. WHEN SPACE TEMPERATURE SENSED BY TEMPERATURE SENSOR IS 10°F (ADJUSTABLE) BELOW THE ROOM'S SUMMER DESIGN TEMPERATURE, OUTSIDE AIR DAMPER OPENS, EXHAUST FAN STARTS. WHEN TEMPERATURE FALLS TO 20°F (ADJUSTABLE) BELOW SUMMER DESIGN TEMPERATURE, FAN STOPS AND OUTSIDE AIR DAMPER CLOSES.
2. WHEN SPACE TEMPERATURE SENSED REACHES SUMMER DESIGN TEMPERATURE, SPLIT SYSTEM UNITS COMPRESSORS WILL CYCLE TO MAINTAIN COOLING SETPOINT. OUTSIDE AIR DAMPER SHALL REMAIN CLOSED WHILE SPLIT SYSTEM IS ENERGIZED.
3. WHEN SPACE TEMPERATURE SENSED BY TEMPERATURE SENSOR FALLS TO WINTER DESIGN TEMPERATURE, SPLITSYSTEM HEAT PUMP REVERSE CYCLE SHALL OPERATE TO MAINTAIN HEATNG SETPOINT. WHEN TEMPERATURE RISES 10°F (ADJUSTABLE) ABOVE SETPOINT, SPLIT SYSTEM DE-ENERGIZES. OUTSIDE AIR DAMPER SHALL REMAIN CLOSED WHILE SPLIT SYSTEM IS ENERGIZED.
4. SYSTEM IN "OFF" POSITION: FAN IS OFF. OUTSIDE AIR DAMPER IS CLOSED. SPLIT SYSTEM IS DE-ENERGIZED.

MECHANICAL ROOM

1. ON A DROP IN ROOM TEMPERATURE BELOW SETPOINT, UNIT HEATER SHALL BE ENERGIZED & DE-ENERGIZED ON A RISE IN ROOM TEMPERATURE 2°F ABOVE SETPOINT.

STORAGE ROOM

1. EXHAUST FAN SHALL RUN CONTINUOUSLY.

MECHANICAL ABBREVIATIONS

A.F.F.	ABOVE FINISHED FLOOR	MT	MOUNT
ARCH.	ARCHITECT (ARCHITECTURAL)	P/C	PRECAST
BLK.	BLOCK	P.S.I.	POUNDS PER SQUARE INCH
C.I.P.	CAST IN PLACE	R.W.C.	RAIN WATER COLLECTION
C.O.	CLEANOUT	SHT.	SHEET
CONC.	CONCRETE	SIM.	SIMILAR
CONN.	CONNECTION	S.O.G.	SLAB ON GRADE
C.W.R.	COLD WATER RISER	SQ. FT.	SQUARE FEET
DET.	DETAIL	STRUCT.	STRUCTURAL
DIA.	DIAMETER	T.F.A.	TO FLOOR ABOVE
F.D.	FLOOR DRAIN	T.F.B.	TO FLOOR BELOW
GALV.	GALVANIZED	TYP.	TYPICAL
GEN'L	GENERAL	U.N.O.	UNLESS NOTED OTHERWISE
M.C.	MECHANICAL CONTRACTOR	W/	WITH
M.H.	MANHOLE		

MECHANICAL SYMBOLS

- EUH-: ELECTRIC UNIT HEATER
- EXHAUST FAN
- INTAKE LOUVER
- A/C UNIT
- INDICATES DIRECTION OF AIR FLOW

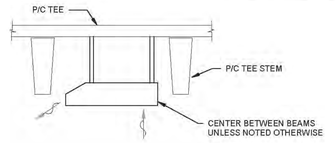

NOTES:

1. UNITS TO ACTIVATE UPON ACTIVATION OF CO/NO2 SENSORS. MOUNT TOP OF AIR DISCHARGE EVEN WITH BOTTOM OF TEE STEMS.
2. PROVIDE VIBRATION ISOLATION BETWEEN FAN AND MOUNTING STRUCTURE, PER FAN MANUFACTURER'S RECOMMENDATIONS.

1 JET FAN DETAIL
3/8" = 1'-0"

PRELIMINARY - DO NOT USE FOR CONSTRUCTION

PRIME DESIGNER
WALKER CONSULTANTS
2895 Greenspoint Parkway, Suite 600
Hoffman Estates IL 60169
847.697.2640 Ph
www.walkerconsultants.com

ARCHITECTURAL
Studio Level 1
STUDIO LEVEL 1
1001 North Warren Street
Gary, IN 46403
219.951.0214 Ph
www.studiolevel1.com

Mount Prospect

MAPLE STREET PARKING DECK

MOUNT PROSPECT, IL

MARK	DATE	DESCRIPTION
		REVISIONS
SHEET ISSUE:		95% CONSTRUCTION DOCUMENTS
SHEET ISSUE DATE:		10/18/2019
PROJECT NO:		31-8504.00
DRAWN BY:		LF
CHECKED BY:		JDS

COPYRIGHT © 2019. ALL RIGHTS RESERVED. NO PART OF THIS DOCUMENT MAY BE REPRODUCED IN ANY FORM OR BY ANY MEANS WITHOUT PERMISSION FROM WALKER CONSULTANTS.

SHEET TITLE:
MECHANICAL GENERAL NOTES, DETAILS, SCHEDULES, SYMBOLS & ABBREVIATIONS

M-001

10/17/2019 9:08:14 AM C:\Revit Projects\31-8504.00-MAPLE STREET PG-MEP_R19_JStirlingF3HSB.rvt

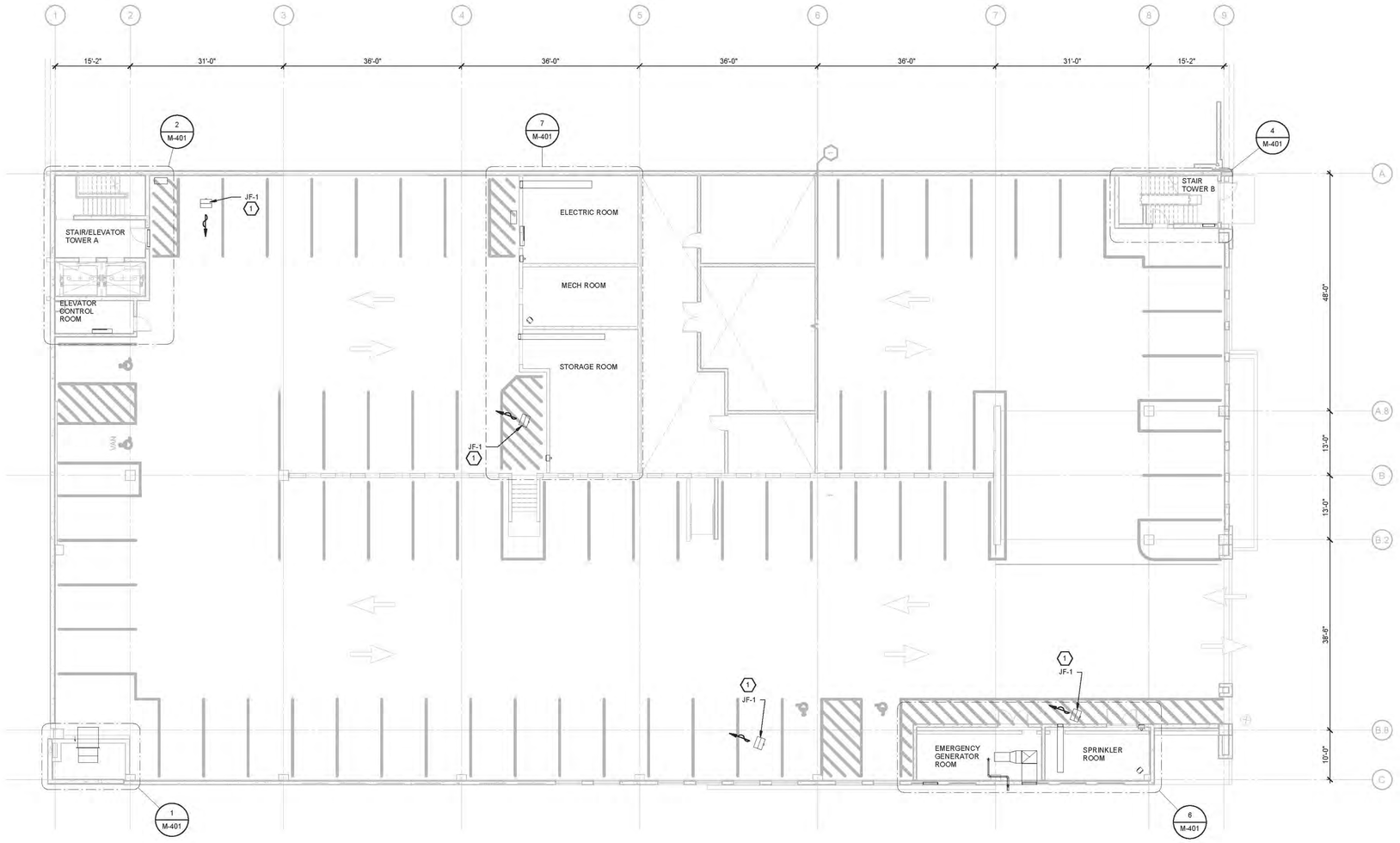

1 GROUND TIER PLAN
3/32" = 1'-0"

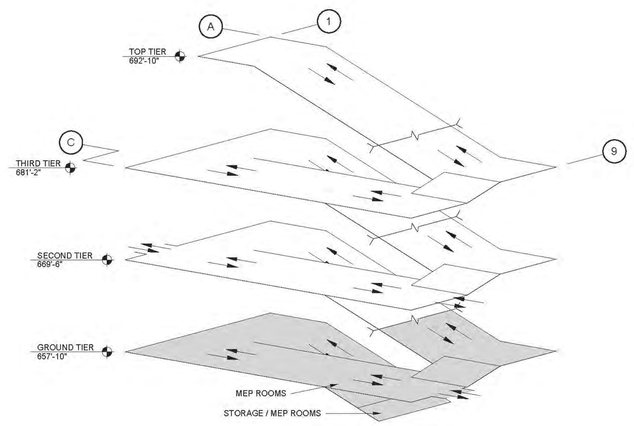

ISOMETRIC

SHEET KEYNOTES

1 GARAGE JET FAN. SEE DETAIL 1/M-001.

PRELIMINARY - DO NOT USE FOR CONSTRUCTION

PRIME DESIGNER

WALKER CONSULTANTS

2895 Greenspoint Parkway, Suite 600
Hoffman Estates IL 60169
847.697.2640 Ph
www.walkerconsultants.com

ARCHITECTURAL

Studio Level 1

STUDIO LEVEL 1
1001 North Warren Street
Gary, IN 46403
219.951.0214 Ph
www.studiolevel1.com

Mount Prospect

MAPLE STREET
PARKING DECK

MOUNT PROSPECT, IL

MARK	DATE	DESCRIPTION
REVISIONS		
SHEET ISSUE:		95% CONSTRUCTION DOCUMENTS
SHEET ISSUE DATE:		10/18/2019
PROJECT NO:		31-8504.00
DRAWN BY:		LF
CHECKED BY:		JDS

COPYRIGHT © 2019. ALL RIGHTS RESERVED. NO PART OF THIS DOCUMENT MAY BE REPRODUCED IN ANY FORM OR BY ANY MEANS WITHOUT PERMISSION FROM WALKER CONSULTANTS.

SHEET TITLE:
GROUND TIER MECHANICAL PLAN

M-101

10/17/2019 9:08:18 AM C:\Revit Projects\31-8504.00-MAPLE STREET PG-MEP_R19_JStirling\F3HSB.rvt

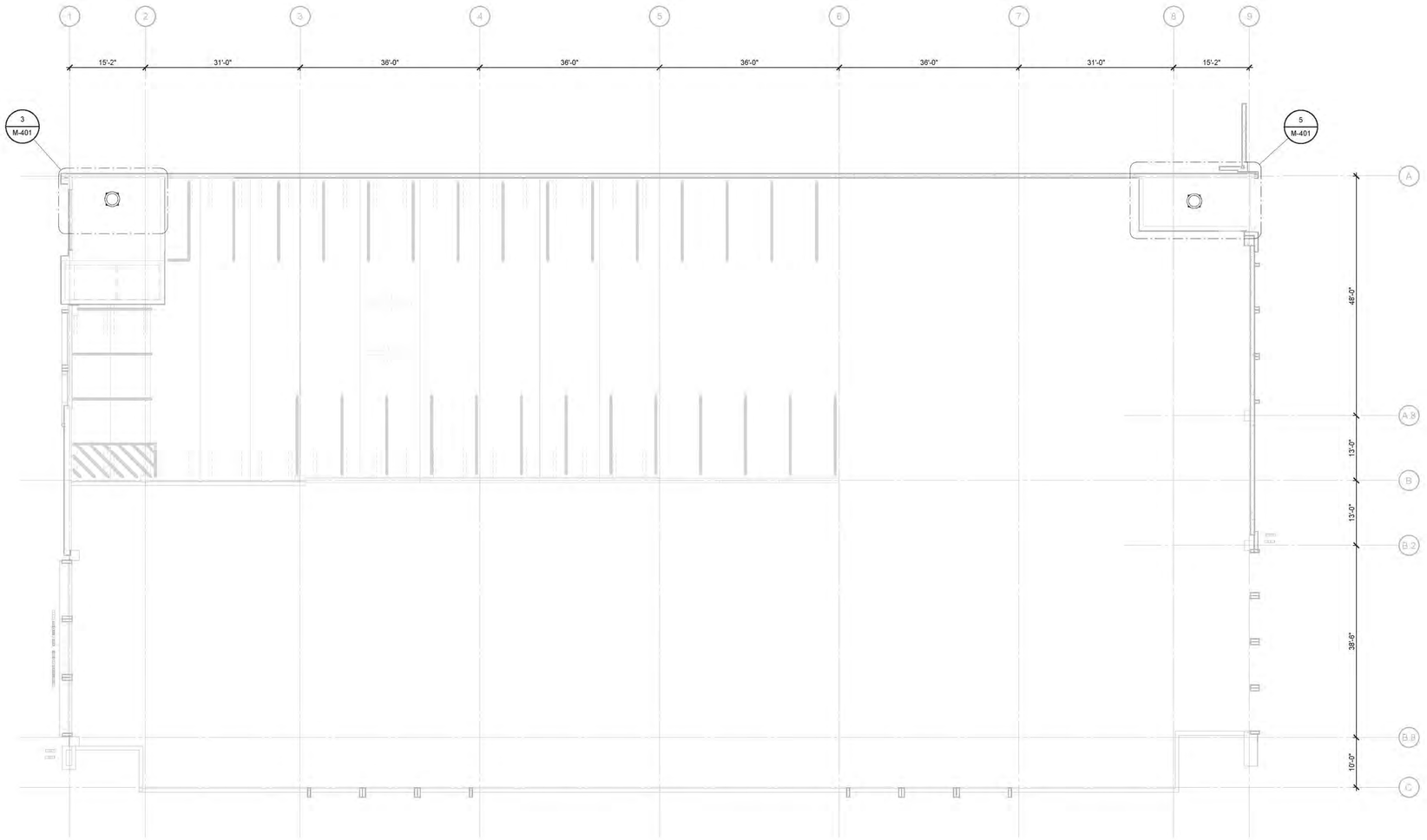

1 TOP TIER PLAN
3/32" = 1'-0"

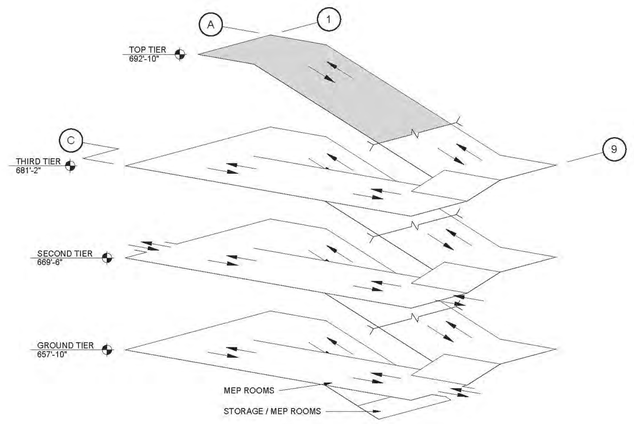

ISOMETRIC

PRELIMINARY - DO NOT USE FOR CONSTRUCTION

PRIME DESIGNER

WALKER CONSULTANTS

2895 Greenspoint Parkway, Suite 600
Hoffman Estates IL 60169
847.697.2640 Ph
www.walkerconsultants.com

ARCHITECTURAL

Studio Level 1

STUDIO LEVEL 1
1001 North Warren Street
Gary, IN 46403
219.951.0214 Ph
www.studiolevel1.com

Mount Prospect

MAPLE STREET
PARKING DECK

MOUNT PROSPECT, IL

MARK	DATE	DESCRIPTION

REVISIONS

SHEET ISSUE:	95% CONSTRUCTION DOCUMENTS
SHEET ISSUE DATE:	10/16/2019
PROJECT NO:	31-8504.00
DRAWN BY:	LF
CHECKED BY:	JDS

COPYRIGHT © 2019. ALL RIGHTS RESERVED. NO PART OF THIS DOCUMENT MAY BE REPRODUCED IN ANY FORM OR BY ANY MEANS WITHOUT PERMISSION FROM WALKER CONSULTANTS.

SHEET TITLE:
TOP TIER MECHANICAL PLAN

M-104

10/17/2019 9:08:23 AM C:\Revit Projects\31-8504.00-MAPLE STREET PG-MEP_R19_JStringF3H58.rvt

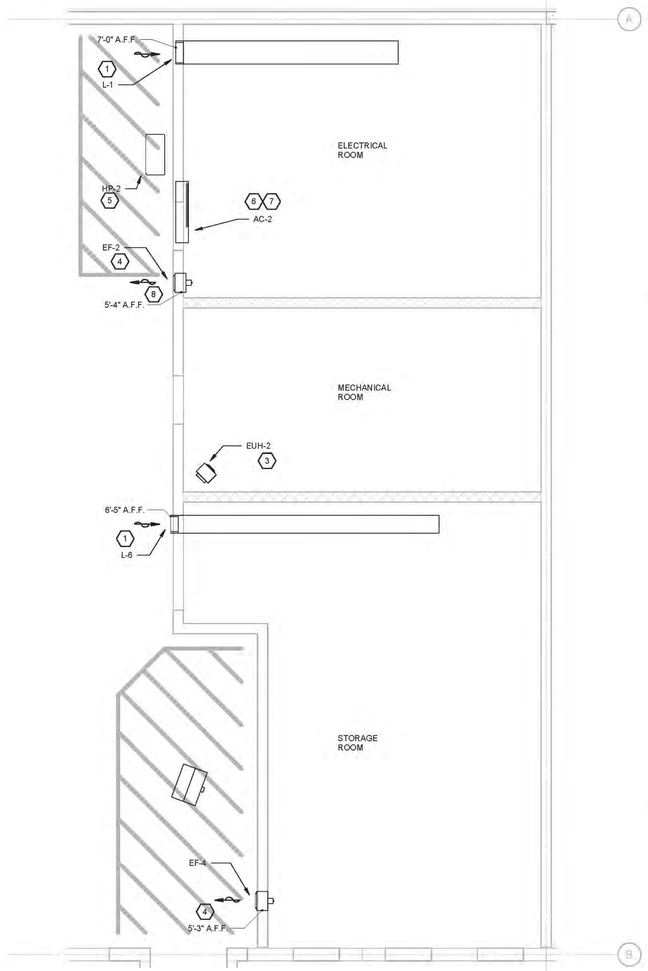

MECHANICAL ENLARGED ELECTRIC/MECHANICAL/STORAGE ROOM PLAN - GROUND TIER

7 — 1/4" = 1'-0"

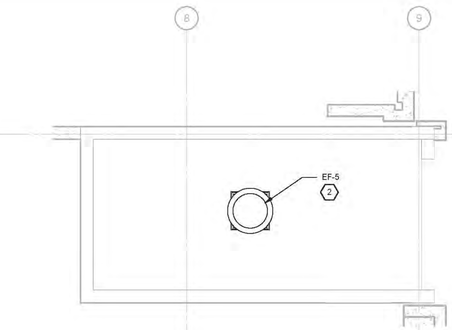

MECHANICAL ENLARGED STAIR TOWER B PLAN - ROOF

5 — 1/4" = 1'-0"

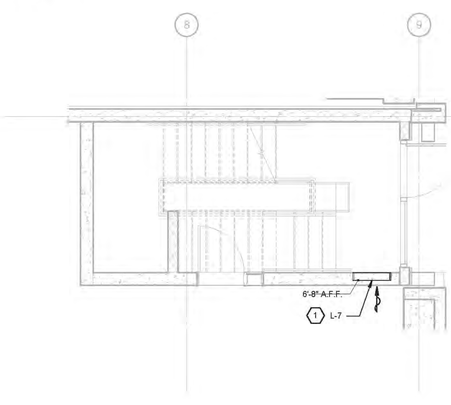

MECHANICAL ENLARGED STAIR TOWER B PLAN - GROUND TIER

4 — 1/4" = 1'-0"

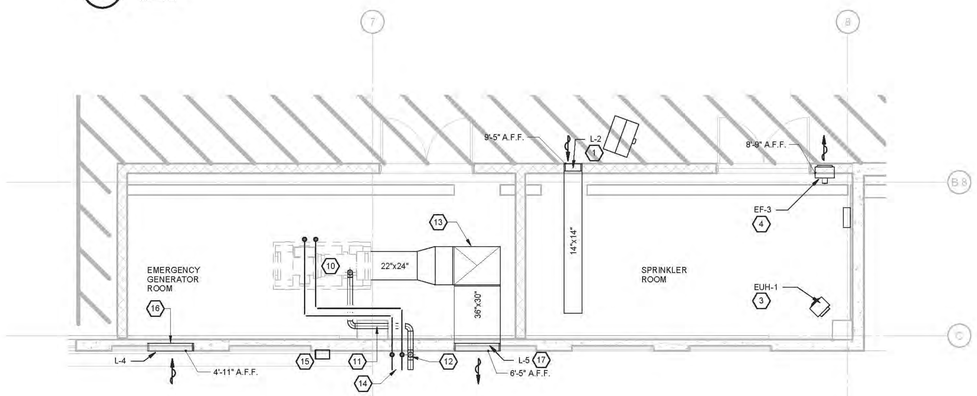

MECHANICAL ENLARGED GENERATOR/SPRINKLER ROOM PLAN - GROUND TIER

6 — 1/4" = 1'-0"

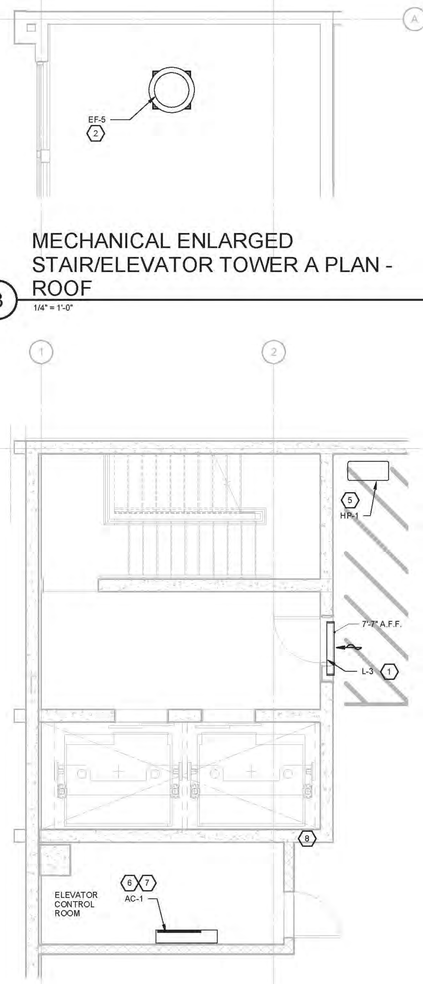

MECHANICAL ENLARGED STAIR/ELEVATOR TOWER A PLAN - ROOF

3 — 1/4" = 1'-0"

MECHANICAL ENLARGED STAIR/ELEVATOR TOWER A PLAN - GROUND TIER

2 — 1/4" = 1'-0"

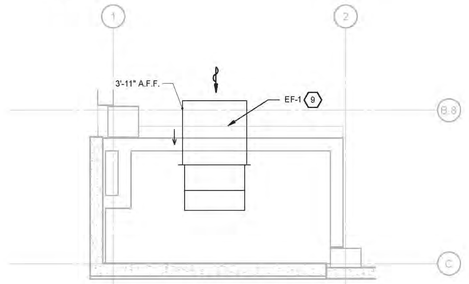

MECHANICAL ENLARGED EXHAUST SHAFT PLAN - GROUND TIER

1 — 1/4" = 1'-0"

SHEET KEYNOTES

1. INTAKE LOUVER AND MOTOR-OPERATED DAMPER. MOTOR-OPERATED DAMPER CONTROLLED BY THERMOSTAT AND INTERLOCKED WITH EXHAUST FAN WITHIN THE SAME SPACE. REFER TO 'OPERATION SEQUENCES' ON M-001, APPROXIMATE BOTTOM ELEVATION OF OPENING SHOWN, COORDINATE WITH GENERAL CONTRACTOR.
2. ROOF EXHAUST FAN. COORDINATE OPENING AND ROOF CURB INSTALLATION WITH GENERAL CONTRACTOR.
3. ELECTRIC UNIT HEATER. INSTALL UNIT NEAR CEILING.
4. SIDEWALL EXHAUST FAN. CONTROLLED BY THERMOSTAT AND INTERLOCKED WITH MOTOR-OPERATED DAMPER WITHIN THE SAME SPACE. APPROXIMATE BOTTOM ELEVATION OF OPENING SHOWN, COORDINATE WITH GENERAL CONTRACTOR.
5. DUCT FREE SPLIT SYSTEM BASE-MOUNTED OUTDOOR UNIT. MOUNT ON HOUSEKEEPING PAD. COORDINATE PAD WITH GENERAL CONTRACTOR.
6. DUCT FREE SPLIT SYSTEM WALL-MOUNTED INDOOR UNIT. MOUNT HIGH ON WALL.
7. REFRIGERANT TUBING AND CONDENSATE DRAIN PIPE SHALL BE INSTALLED WITH 3/4" BLACK FLEXIBLE CLOSED-CELL ELASTOMERIC THERMAL INSULATION IN ITS ENTIRETY FROM INDOOR UNIT CONNECTION TO OUTDOOR UNIT CONNECTION. INSULATION SHALL HAVE A MINIMUM THERMAL CONDUCTIVITY (K) OF 0.24 BTU/IN/(HR-FT2-F) AND INSTALLATION SHALL BE SUITABLE FOR USE OUTDOORS, WHERE APPLICABLE, BY MEANS OF A PROTECTIVE COATING OR JACKETING.
8. CONDENSATE DRAIN PIPING FROM HVAC EQUIPMENT TO TERMINATE AT FLOOR DRAIN IN THIS AREA WITH INDIRECT CONNECTION. TO THE BEST EXTENT POSSIBLE, ALL CONDENSATE DRAIN PIPING SHALL BE ROUTED WITH A MINIMUM 1/8" PER 1'-0" SLOPE. SEE PLUMBING DRAWINGS FOR EXACT LOCATION OF FLOOR DRAIN.
9. SIDEWALL GARAGE EXHAUST FAN. SEE DETAIL 2/M-001, APPROXIMATE BOTTOM ELEVATION OF OPENING SHOWN, COORDINATE WITH GENERAL CONTRACTOR.
10. EMERGENCY GENERATOR BY ELECTRICAL. SEE DETAIL 3/M-001 FOR ADDITIONAL MECHANICAL-SCOPE REQUIREMENTS.
11. 4" DIA. GENERATOR EXHAUST PIPE, SCH 40 CARBON STEEL APPLY 4" INSULTATION (TWO LAYERS, EACH LAYER 2" THICK, WITH STAGGERED SEAMS) SIMILAR TO JOHNS MANVILLE THERMO-12 GOLD. INSULATION SHALL BE 11 POUNDS PER CUBIC FOOT DENSITY MOLDED ASBESTOS-FREE HYDROUS CALCIUM SILICATE WITH A K FACTOR OF 0.38 AT 200F MEAN TEMPERATURE. INSULATION SHALL BE FASTENED IN PLACE WITH ADHESIVE AS PER MANUFACTURER'S RECOMMENDATIONS AND 16 GAUGE COPPER_CLAD WIRE ON 9 INCH MAXIMUM CENTERS. FILL JOINTS WITH INSULATING CEMENT. PROVIDE 1 INCH GALVANIZED WIRE MESH ON INSULATED SURFACES. SECURE AND PROVIDE TIGHT. APPLY 1/4 INCH THICK FINISHING CEMENT. USE CORNER BEADS FOR A SMOOTH FINISH WHERE INSULATION IS TERMINATED.
12. PROVIDE THIMBLE AT EXHAUST PIPE PENETRATION IN EXTERIOR WALL.
13. PROVIDE GENERATOR EXHAUST DUCTWORK FROM RADIATOR DISCHARGE TO EXHAUST LOUVER. PROVIDE DUCTWORK TRANSITIONS AS REQUIRED.
14. VENT PIPING OUTLETS SHALL BE LOCATED SUCH THAT THE VAPORS ARE RELEASED AT A SAFE POINT OUTSIDE OF BUILDING AND NOT LESS THAN 12"-0" ABOVE THE ADJACENT GROUND LEVEL. VAPORS SHALL NOT BE TRAPPED BY EAVES OR OTHER OBSTRUCTIONS. VENT LINES SHALL BE AT 5'-0" FROM BUILDING OPENINGS OR LOT LINES. CONTRACTOR TO PROVIDE PROPER SUPPORT FOR VENT LINES. INSTALL PER MANUFACTURER, STATE, FEDERAL AND LOCAL CODES.
15. REMOTE FILL HOSE. SLOPE FILL PIPING TOWARDS BASE TANK. PROVIDE LOCKABLE FILL CAP. FILLING OF THE TANK SHALL TAKE PLACE OUTDOORS. THE FILL IS REQUIRED TO BE EQUIPPED WITH A SPILL CONTAINER HAVING A CAPACITY OF NO LESS THAN 5 GALLONS W/ ALARM PANEL. THE TANK FILL CONNECTION SHALL BE OUTSIDE OF THE BUILDING AT A LOCATION FROM FROM SOURCES OF IGNITION AND NOT LESS THAN 5'-0" AWAY FROM BUILDING OPENINGS. THE CONNECTION SHALL BE PROVIDED WITH A LIQUID TIGHT CAP, WHICH SHALL BE CLOSED WHEN NOT IN USE AND PROPERLY IDENTIFIED.
16. INTAKE LOUVER AND MOTOR-OPERATED DAMPER. MOTOR-OPERATED DAMPER INTERLOCKED WITH EMERGENCY GENERATOR OPEARATION. REFER TO OPERATION SEQUENCES' ON M-001 AND DETAIL 3/M-001. APPROXIMATE BOTTOM ELEVATION OF OPENING SHOWN, COORDINATE WITH GENERAL CONTRACTOR.
17. EXHAUST LOUVER AND MOTOR-OPERATED DAMPER. MOTOR-OPERATED DAMPER INTERLOCKED WITH EMERGENCY GENERATOR OPEARATION. REFER TO OPERATION SEQUENCES' ON M-001 AND DETAIL 3/M-001. APPROXIMATE BOTTOM ELEVATION OF OPENING SHOWN, COORDINATE WITH GENERAL CONTRACTOR.

TRUE NORTH

PRELIMINARY - DO NOT USE FOR CONSTRUCTION

PRIME DESIGNER

WALKER CONSULTANTS

2895 Greenspoint Parkway, Suite 600
Hoffman Estates IL 60169
847.697.2640 Ph
www.walkerconsultants.com

ARCHITECTURAL

Studio Level 1

STUDIO LEVEL 1
1001 North Warren Street
Gary, IN 46403
219.951.0214 Ph
www.studiolevel1.com

Mount Prospect

MAPLE STREET PARKING DECK

MOUNT PROSPECT, IL

MARK	DATE	DESCRIPTION
		REVISIONS
SHEET ISSUE:		95% CONSTRUCTION DOCUMENTS
SHEET ISSUE DATE:		10/16/2019
PROJECT NO:		31-8504.00
DRAWN BY:		LF
CHECKED BY:		JDS

COPYRIGHT © 2019. ALL RIGHTS RESERVED. NO PART OF THIS DOCUMENT MAY BE REPRODUCED IN ANY FORM OR BY ANY MEANS WITHOUT PERMISSION FROM WALKER CONSULTANTS.

SHEET TITLE:
MECHANICAL ENLARGED PLANS

M-401

10/17/2019 9:08:28 AM C:\Revit Projects\31-8504.00-MAPLE STREET PG-MEP_R19_JStirling\F3458.rvt

LIGHT FIXTURE SCHEDULE

TYPE	MOUNTING	LAMP	MANUFACTURER	CATALOG NUMBER	REMARKS
F1	TRUNNION MOUNT	LED 4000K	LITHONIA OR RAB OR CREE	VCPG-P3-40K-T5M-MVOLT-YK-SF-PIR3FC3V-DWHXD PRT-55-N-W-D10-WS + WSREM MOUNT: IG-PD-WH + LUMINAIRE: IG-NM-5S-J-40K-IJL-WH-PML70% + XA-SENSREM	TYPICAL LEVEL LIGHT FIXTURE. 4000K, U.L. LISTED FOR WET LOCATIONS, TAMPERPROOF, WITH OCCUPANCY/PHOTO SENSOR CONTROL PROVIDING DUAL LEVEL LIGHTING CONTROL. FUSED, 120V, (66W, 0.61A) WHITE FINISH. SEE NOTE #17 FOR LIGHTING CONTROL REQUIREMENTS. PROVIDE CONFIGURATION REMOTES REQUIRED FOR ADJUSTING OCCUPANCY/PHOTO SENSORS.
F2	POLE MOUNT	LED 4000K	BEACON OR EATON OR LSI	VPL-84L-135-4K7-4-UNV-A-DB-SCP/40-F-BC-HSS/VP-L/60-FB/DB + SCP-REMOTE GLEON-AF-03-LED-E1-SL4-BZ-F120-HSS-MS/DIM-L20 + FSIR-100 MRM-LED-30L-SIL-FT-UNV-DIM-40-70CRI-IMS0M2-BRZ-IL + IMS/PC	TOP LEVEL LIGHT FIXTURE WITH HOUSE-SIDE SHIELD. 4000K, U.L. LISTED FOR WET LOCATIONS. 120V, FUSED, (247W, 2.17A). WITH OCCUPANCY/PHOTO SENSOR PROVIDING DUAL LEVEL LIGHTING CONTROL. 19'-0" MOUNTING HEIGHT, 15'-0" SQUARE STRAIGHT POLES MOUNTED ON 4'-0" COLUMN EXTENSION KW SSP15-4.0-11 OR LITHONIA SSS-15-4C OR LSI 4SQ-S11G-15. POLES ARE TO BE INTERNALLY COATED. BRONZE FINISH. SEE NOTE #16 FOR LIGHTING CONTROL REQUIREMENTS. PROVIDE CONFIGURATION REMOTES REQUIRED FOR ADJUSTING OCCUPANCY/PHOTO SENSORS.
F2A	POLE MOUNT	LED 4000K	BEACON OR EATON OR LSI	VPL-80L-180-4K7-3-UNV-A-DB-SCP/40-F-BC-HSS/VP-L/60-FB/DB + SCP-REMOTE GLEON-AF-04-LED-E1-SL3-BZ-F120-HSS-MS/DIM-L20 + FSIR-100 MRM-LED-30L-SIL-3-UNV-DIM-40-70CRI-IMS0M2-BRZ-IL + IMS/PC	TOP LEVEL LIGHT FIXTURE WITH HOUSE-SIDE SHIELD. 4000K, U.L. LISTED FOR WET LOCATIONS. 120V, FUSED, (247W, 2.17A). WITH OCCUPANCY/PHOTO SENSOR PROVIDING DUAL LEVEL LIGHTING CONTROL. 19'-0" MOUNTING HEIGHT, 15'-0" SQUARE STRAIGHT POLES MOUNTED ON 4'-0" COLUMN EXTENSION KW SSP15-4.0-11 OR LITHONIA SSS-15-4C OR LSI 4SQ-S11G-15. BRONZE FINISH. SEE NOTE #16 FOR LIGHTING CONTROL REQUIREMENTS. PROVIDE CONFIGURATION REMOTES REQUIRED FOR ADJUSTING OCCUPANCY/PHOTO SENSORS.
F3	WALL ARM MOUNT	LED 4000K	CREE OR EATON OR LITHONIA	SEC-EDG-4M-WM-04-E-UL-BZ-525-40K-F-PML + XA-SENSREM GWC-AF-01-LED-E1-T4FT-BZ-F-MS/DIM-L08 + FSIR-100 DSXW1-LED-20C-700-40K-TFTM-MVOLT-BBW-SF-PIR-DDBXD	STAIRTOWER/ENTRANCE LIGHT FIXTURE. 4000K, U.L. LISTED FOR WET LOCATIONS. 120V, (70W, 0.58A), WITH OCCUPANCY/PHOTO SENSOR PROVIDING DUAL LEVEL LIGHTING CONTROL, FUSED, WITH INTEGRAL PHOTOCELL, WITH WALL MOUNTING ARM. BRONZE FINISH. SEE NOTE #18 FOR LIGHTING CONTROL REQUIREMENTS. PROVIDE CONFIGURATION REMOTES REQUIRED FOR ADJUSTING OCCUPANCY/PHOTO SENSORS.
F4	CEILING SURFACE MOUNT	LED 4000K	KENALL OR LITHONIA OR ECLIPSE	MLHA8-48-F-MW-PP-45L40K-DCC-DV-FS-9500-TL50-TN05 + TL50-RC1 STL4-48L-EZ1-LP840-LSXR10ANL-SC2-(FUSED) 574-SPL-120-50WLED-4K-WH-FUS-MSI3	STAIRTOWER/ELEVATOR LOBBY LIGHT FIXTURE. 4000K, VANDAL RESISTANT, FUSED, 120V, (60W, 0.56A), DIMMING POWER SUPPLY WITH OCCUPANCY/PHOTO CONTROL SENSOR PROVIDING DUAL LEVEL LIGHTING CONTROL. U.L. LISTED FOR WET LOCATIONS. PROVIDE (2) TAMPER-PROOF TOOLS. WHITE FINISH. SEE NOTE #19 FOR LIGHTING CONTROL REQUIREMENTS. PROVIDE CONFIGURATION REMOTES REQUIRED FOR ADJUSTING OCCUPANCY/PHOTO SENSORS.
F5	WALL MOUNT	LED	LITHONIA OR PATHWAY OR EATON OR HUBBELL LIGHTING OR MULE LIGHTING	LV-S-WB-1-R-120-4X (FUSED) JSLX1R-WL-TP-120 (FUSED) LPXW-6-1-R-WH (FUSED). SEWL-S-R-W (FUSED) WLCX-1-R-W (FUSED)	SINGLE FACE L.E.D. EXIT SIGN WITH SIDE CONDUIT ENTRY. FUSED, 120V, VANDAL RESISTANT WITH TWO (2) TAMPERPROOF TOOLS W/ARROWS AS INDICATED ON DRAWINGS. U.L. LISTED FOR WET LOCATIONS.
F5A	CEILING MOUNT	LED	LITHONIA OR PATHWAY OR MULE LIGHTING	LV-S-WB-1-R-120-UM-4X (FUSED) JSLX1CR-WL-TP-120 (FUSED) WLCX-1-R-W-U (FUSED)	SINGLE FACE L.E.D. EXIT SIGN. FUSED, 120V, VANDAL RESISTANT WITH TWO (2) TAMPERPROOF TOOLS W/ARROWS AS INDICATED ON DRAWINGS. U.L. LISTED FOR WET LOCATIONS.
F6	SUSPENDED MOUNT	LED 4000K	LITHONIA OR COLUMBIA OR EATON	TZL1N-L96-10000LM-FST-120-40K-80CRI-WH (HC36) LCL8-40K-ML-E-U (CSHC) 8T-SNLED-LD5-83SL-LN-UNV-L840-CD1-U (AYC-CHAIN/SET)	GENERAL PURPOSE 8'-0" LENGTH UTILITY LIGHT FIXTURE. 120V, (84W, 0.78A), U.L. LISTED.
F6A	SUSPENDED MOUNT	LED 4000K	LITHONIA OR COLUMBIA OR EATON	TZL1N-L96-10000LM-FST-120-40K-80CRI-E7W-WH (HC36) LCL8-40K-ML-E-U-ELL14 (CSHC) 8T-SNLED-LD5-83SL-LN-UNV-EL7W-L840-CD1-U (AYC-CHAIN/SET)	EMERGENCY 8'-0" LENGTH UTILITY LIGHT FIXTURE. 120V, (84W, 0.78A), WITH SELF CONTAINED EMERGENCY LIGHTING PACK. U.L. LISTED.
F6B	SUSPENDED MOUNT	LED 4000K	LITHONIA OR COLUMBIA OR EATON	TZL1N-L96-6000LM-FST-120-40K-80CRI-E7W-WH (HC36) LCL8-40K-LW-E-U-ELL14 (CSHC) 8T-SNLED-LD5-68SL-LN-UNV-EL7W-L840-CD1-U (AYC-CHAIN/SET)	EMERGENCY 8'-0" LENGTH UTILITY LIGHT FIXTURE. 120V, (50W, 0.44A), WITH SELF CONTAINED EMERGENCY LIGHTING PACK. U.L. LISTED.
F7	SUSPENDED MOUNT	LED 4000K	LITHONIA OR COLUMBIA OR EATON	ZL1N-L48-7000LM-FST-120-40K-80CRI-E7W-WH (HC36) LCL4-40K-HL-E-U-ELL14 (CSHC) 4SNLED-LD5-64SL-LN-UNV-EL7W-L840-CD1-U (AYC-CHAIN/SET)	ELECTRICAL ROOM 4'-0" LENGTH UTILITY LIGHT FIXTURE. 120V, (55W, 0.48A), WITH SELF CONTAINED EMERGENCY LIGHTING PACK. U.L. LISTED.
F8	WALL MOUNT	LED 4000K	ECLIPSE OR HUBBELL OR PHOENIX	220-LED/25W-4K-120-BZ-5110 VTC-5K-G-U-W-2-G-G VA-W-17LED-CW-GPC	ELEVATOR SHAFT LIGHT FIXTURE. 120V (25W, 0.23A), WITH BACK BOX. U.L. LISTED FOR WET LOCATIONS.

ELECTRICAL SYMBOLS

- LIGHT FIXTURE
- LIGHT FIXTURE (NL) CONNECTED TO EMERGENCY POWER
- LINEAR LED FIXTURE (NL) CONNECTED TO EMERGENCY POWER
- STRIP LED FIXTURE
- WALL MOUNTED FIXTURE
- POLE MOUNTED FIXTURE
- EMERGENCY LIGHT CONNECTED TO EMERGENCY POWER

F1, F2, ETC. = FIXTURE TYPE
C, D, NL, ETC. = SWITCHING

- EXIT SIGN CONNECTED TO EMERGENCY POWER

MOUNT SO TOP OF UNIT IS 6" BELOW BOTTOM OF TEE STEMS BUT NEVER HIGHER THAN 9'-0" A.F.F.

- EMERGENCY PHONE
- PHONE
- DATA OUTLET
- CCTV FIXED
- CCTV PTZ
- DISCONNECT SWITCH
- FUSED DISCONNECT SWITCH
- EUH ELECTRIC UNIT HEATER
- EXHAUST FAN
- INTAKE LOUVER
- A/C UNIT
- FIRE ALARM PULL STATION
- FIRE ALARM HORN/STROBE
- INDICATES DIRECTION OF AIR FLOW
- JUNCTION BOX
- QUAZITE JUNCTION BOX
- MOTOR
- STARTER
- KEY OPERATED SWITCH
- PHOTOELECTRIC CONTROL
- OCCUPANCY SENSOR
- SMOKE DETECTOR
- HEAT DETECTOR
- CARBON MONOXIDE DETECTOR
- THERMOSTAT
- S LIGHT SWITCH
- S_3 3 WAY LIGHT SWITCH
- 20 AMP DUPLEX RECEPTACLE

MOUNT 18" A.F.F., EXCEPT IN PARKING AREAS MOUNT 36" A.F.F.

- ELECTRICAL PANEL
- VERTICAL CONDUIT
- EXPOSED CONDUIT
- CONCEALED CONDUIT
- GROUND ROD

GENERAL NOTES

1. ALL FIXTURES ARE TYPE F1 UNLESS NOTED OTHERWISE. SEE FIXTURE MOUNTING DETAIL 1/E-501. SEE LIGHT FIXTURE SCHEDULE ON THIS SHEET.
2. LIGHT FIXTURES AND CONDUIT ARE SHOWN IN REFLECTED CEILING ORIENTATION.
3. ALL CONDUITS SHALL CONTAIN A GREEN COLORED EQUIPMENT GROUNDING CONDUCTOR PROVIDING CONTINUITY TO ALL BOXES, DEVICES AND FIXTURES. LIGHT FIXTURE CONDUCTORS SHALL BE NO.10 THWN UNLESS NOTED OTHERWISE. ALL HOMERUN CONDUCTOR SIZES SHALL BE AS NOTED ON THE PANEL SCHEDULES. CONDUIT SIZING SHALL BE BASED ON USE OF THWN INSULATION AND NEC REQUIREMENTS.
4. ALL ABOVE GROUND CONDUIT SHALL BE SURFACE MOUNTED RIGID HOT DIPPED GALVANIZED STEEL WITH THREADED FITTINGS UTILIZING HOT DIPPED GALVANIZED, CAST, OR MALLEABLE IRON THREADED JUNCTION BOXES AND COVERS. ALL UNDERGROUND CONDUIT SHALL BE PVC MINIMUM CONDUIT SIZE IS 3/4" UNLESS NOTED OTHERWISE. USE SEAL TIGHT FLEXIBLE CONDUIT IN LENGTHS NO GREATER THAN 2'-0" TO CONNECT MOTORS, TRANSFORMERS AND FOR WHIPS CONNECTING TRUNNION MOUNTED FIXTURES TO JUNCTION BOXES. DO NOT INSTALL FLEXIBLE CONDUIT AT OTHER LOCATIONS WITHOUT WRITTEN APPROVAL OF ENGINEER.
5. ALL HORIZONTAL CONDUIT RUNS ARE TO BE ROUTED EXPOSED ALONG THE CEILING THRU BLOCK-OUTS IN TEE STEMS AND BEAMS. COORDINATE REQUIRED BLOCK-OUTS IN TEE STEMS AND BEAMS WITH STRUCTURAL ENGINEER. ALL VERTICAL CONDUIT RUNS SHALL BE ROUTED EXPOSED ALONG COLUMNS/WALLS IN PARKING AREAS. HOMERUNS TO ELECTRICAL ROOM ARE TO BE ROUTED DOWN ADJACENT COLUMNS THEN UNDERGROUND TO THE ELECTRICAL ROOM. ALL EXPOSED CONDUIT MUST BE ROUTED UP TIGHT AGAINST THE CEILING, COLUMNS, TEES OR WALLS. NO GAPS WILL BE PERMITTED. (USING BLOCKOUTS OR OTHER STRUCTURAL MEMBERS AS A SOURCE OF SUPPORT IS PROHIBITED. ROUTING CONDUIT UNDER BEAMS WILL NOT BE PERMITTED.) CONDUIT SHALL NOT BE ROUTED BEHIND SIGNS, OR LOCATED SUCH A WAY THAT IT OBSTRUCTS THE OPERATION OF A DEVICE OR RESTRICTS OPENING AN ACCESS POINT, ENCLOSURE DOOR OR ANY OTHER PIECE OF EQUIPMENT.
6. AT STAIRS AND ELEVATOR TOWERS RUN CONDUITS BELOW SLAB AND FROM BOTTOM UP AND DO NOT CROSS EXPANSION JOINTS AT SUPPORTED TIERS UNLESS NOTED OTHERWISE. DO NOT ROUTE VERTICAL CONDUIT RISERS THROUGH EXPANSION JOINTS.
7. PROVIDE CONDUIT EXPANSION FITTINGS FOR ALL CONDUIT THAT CROSS EXPANSION JOINT AT LOCATIONS REQUIRED.
8. DO NOT ENCASE CONDUIT IN SLAB ON GRADE. INSTALL BELOW SLAB ON GRADE AND GRADE BEAMS, AVOID BELOW GRADE CONDUIT.
9. THE USE OF POWDER PROPELLED FASTENERS FOR MOUNTING CONDUIT, SUPPORTS, JUNCTION BOXES, FIXTURES OR OTHER EQUIPMENT IS PROHIBITED.
10. PROVIDE APPROVED HOT DIPPED GALVANIZED STEEL GUARDS AROUND JUNCTION BOXES, CONDUITS AND OTHER EQUIPMENT WHICH MAY BE EXPOSED TO POSSIBLE BUMPER DAMAGE. SEE STRUCTURAL DRAWINGS.
11. LIGHTING DESIGN TO BE AS SHOWN ON DRAWINGS BUT IN NO CASE LESS THAN IESNA RP-8-18, AND IESNA G-1-16, "LIGHTING FOR PARKING FACILITIES" AND ALL OTHER LOCAL CODE REQUIREMENTS. ALL LIGHTING VALUES ARE END OF PROJECTED LIFE. LED THEORETICAL LUMEN DEPRECIATION FACTOR SHALL BE GREATER THAN 100,000 HOURS. PROVIDE EMERGENCY EGRESS LIGHTING ALONG THE PATH OF EGRESS OF LIFE 1 FC AVERAGE AND 40:1 MAX TO MIN IN ACCORDANCE WITH THE NFPA AND BUILDING CODE.
12. ALL RECEPTACLES SHALL BE G.F.C.I. TYPE. ALL RECEPTACLES EXCEPT THOSE IN ENCLOSED ROOMS SHALL HAVE WEATHERPROOF COVERS.
13. PROVIDE EMERGENCY LIGHTING AND SIGNAGE AS REQUIRED BY LOCAL CODES TO ILLUMINATE AND IDENTIFY EGRESS PATHS UTILIZING AN EMERGENCY GENERATOR COMPLETE WITH AUTOMATIC TRANSFER SWITCHES. WIRING FROM EMERGENCY SOURCE DISTRIBUTION OVER CURRENT PROTECTION TO EMERGENCY LOADS SHALL BE KEPT ENTIRELY INDEPENDENT OF ALL OTHER WIRING AND EQUIPMENT AND SHALL NOT ENTER THE SAME RACEWAY, CABLE, BOX OR CABINET WITH OTHER WIRING.
14. CONDUITS ARE TO BE LOCATED IN THE GARAGE INTERIOR TO MINIMIZE VISUAL IMPACT. DO NOT ROUTE CONDUITS ON THE EXTERIOR OF ANY PART OF THE STRUCTURE. FIXTURES LOCATED ON THE EXTERIOR OF THE STRUCTURE ARE TO BE FED FROM BEHIND WITH NO CONDUIT VISIBLE FROM THE OUTSIDE. FIXTURES LOCATED ON BRICK (INSIDE OR OUTSIDE THE STRUCTURE) ARE TO BE FED FROM BEHIND WITH NO CONDUIT VISIBLE.
15. IN LOCATIONS WHERE LIGHT FIXTURES, EXIT SIGNS, FIRE ALARM STROBES OR OTHER PIECES OF EQUIPMENT NEED TO BE MOUNTED TO A COLUMN OR WALL OVER PIPING OR OTHER OBSTACLES, PROVIDE EXTENSION BRACKETS MADE OUT OF 1/4" HOT DIPPED GALVANIZED STEEL PLATES AS REQUIRED.
16. THE LIGHTING LAYOUT SHOWN IS BASED ON A UNIFORM STRUCTURAL LAYOUT USING 12'-0" PRECAST DOUBLE TEES. IF A DIFFERENT STRUCTURAL ARRANGEMENT IS SELECTED, THE FIXTURE LOCATIONS CAN BE MOVED A MAXIMUM OF 2'-0" PARALLEL TO THE CENTERLINE OF THE BAY. THE MINIMUM ALLOWABLE DISTANCE BETWEEN THE SIDE OF A FIXTURE AND THE SIDE OF A TEE STEM IS 1'-0" THE NUMBER OF FIXTURES IN AN AREA MUST REMAIN THE SAME. FIXTURES MUST BE LOCATED TO PROVIDE MAXIMUM UNIFORMITY AND MAXIMUM BENEFIT OF UPLIGHT. MOUNT FIXTURES TO ONE SIDE IF LOCATED AT PRECAST JOINT.
17. THE F1 FIXTURES SHALL BE EQUIPPED WITH INDIVIDUAL OCCUPANCY SENSORS CONTROLLING DIMMING (100% HIGH/30% LOW) POWER SUPPLY. THE FIXTURES SHALL BE PROGRAMMED TO SWITCH FROM HIGH MODE TO LOW MODE 5 MINUTES AFTER MOVEMENT IS NO LONGER DETECTED. UPON DETECTING MOVEMENT, FIXTURES ARE TO IMMEDIATELY SWITCH TO HIGH MODE. THE FIXTURES SHALL TURN OFF COMPLETELY WHEN THE LIGHT LEVEL INCREASES TO 20 FOOT CANDLES AND BACK ON (OCCUPANCY SENSOR CONTROLLING FIXTURES) WHEN THE LIGHT LEVEL IS LESS THAN 10 FOOT CANDLES.
18. THE F2/F2A AND F3 FIXTURES SHALL BE EQUIPPED WITH INDIVIDUAL OCCUPANCY/PHOTO CONTROL SENSORS CONTROLLING DIMMING (100% HIGH/30% LOW) POWER SUPPLY. THE FIXTURES SHALL BE PROGRAMMED TO SWITCH FROM HIGH MODE TO LOW MODE 5 MINUTES AFTER MOVEMENT IS NO LONGER DETECTED. UPON DETECTING MOVEMENT, FIXTURES ARE TO IMMEDIATELY SWITCH TO HIGH MODE. THE FIXTURES SHALL TURN OFF COMPLETELY WHEN THE LIGHT LEVEL INCREASES TO 10 FOOT CANDLES AND BACK ON (OCCUPANCY SENSOR CONTROLLING FIXTURES) WHEN THE LIGHT LEVEL IS LESS THAN 5 FOOT CANDLES.
19. THE F4 FIXTURES SHALL BE EQUIPPED WITH INDIVIDUAL OCCUPANCY/PHOTO CONTROL SENSORS CONTROLLING DIMMING (100% HIGH/30% LOW) POWER SUPPLY. THE FIXTURES SHALL BE PROGRAMMED TO SWITCH FROM HIGH TO LOW MODE 5 MINUTES AFTER MOVEMENT IS NO LONGER DETECTED. UPON DETECTING MOVEMENT, FIXTURES ARE TO IMMEDIATELY SWITCH TO HIGH MODE. THE FIXTURES SHALL TURN OFF COMPLETELY OVERRIDING ALL OCCUPANCY SENSOR CONTROL WHEN THE LIGHT LEVEL INCREASES TO 30 FOOT CANDLES AND BACK ON (OCCUPANCY SENSOR CONTROLLING FIXTURES) WHEN THE LIGHT LEVEL IS LESS THAN 20 FOOT CANDLES.

ELECTRICAL ABBREVIATIONS

A OR AMP	AMPERE
AFF	ABOVE FINISHED FLOOR
ARCH	ARCHITECT (ARCHITECTURAL)
BB	BACKBOARD
CKT	CIRCUIT
C	CONDUIT
/C	CONDUCTOR
CIP	CAST IN PLACE
COMM	COMMUNICATIONS
CNVA	CONSTANT WATTAGE AUTO-TRANSFORMER
DET	DETAIL
DIA	DIAMETER
EJ	EXPANSION JOINT
GFCI	GROUND FAULT CIRCUIT INTERRUPTER
GRD	GROUND
GT, T2	TIER DESIGNATION: GROUND TIER, 2ND TIER, ETC.
JB	JUNCTION BOX
HP	HORSEPOWER
HZ	HERTZ
HX-HPF	HIGH REACTANCE HIGH POWER FACTOR BALLAST
INCAND	INCANDESCENT
KVA	KILOVOLT-AMPERE
KW	KILOWATT
LS	LIFE SAFETY
PARCS	PARKING ACCESS & REVENUE CONTROL SYSTEM
PC	PHOTOELECTRIC CONTROL
PH	PHASE
PNL	PANEL
RECEPT	RECEPTACLE
RECEPT	RIGID METAL CONDUIT
SB	STANDBY
SHT	SHEET
SIM	SIMILAR
SOG	SLAB ON GRADE
SP	STATIC PRESSURE
STRUCT	STRUCTURAL
SW	SWITCH
TFA	TO FLOOR ABOVE
TFB	TO FLOOR BELOW
TRANS	TRANSFORMER
TYP	TYPICAL
UL	UNDERWRITER'S LABORATORIES
UNO	UNLESS NOTED OTHERWISE
V	VOLT
W	WATT
WP	WEATHERPROOF
W/	WITH

ELECTRICAL ROOM

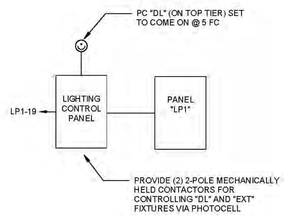

CONTROL IDENTIFICATION SCHEDULE

(INSCRIBE THIS SEQUENCE ON THE LOWER RIGHT CORNER OF THE LIGHTING CONTROL PANEL.)

		CONTROL	
IDENT.	FUNCTION	ON	OFF
"C", "NL"	GARAGE AND STAIR FIXTURES	INTEGRATED PHOTOCELL/OCCUPANCY SENSORS	INTEGRATED PHOTOCELL/OCCUPANCY SENSORS
"DL"	DAYTIME SUPPLEMENTAL ENTRY LIGHTING	PC "DL" (INVERSE)	PC "DL" (INVERSE)
"EXT"	DUSK TO DAWN	PC "DL"	PC "DL"

LIGHTING CONTROL TERMINOLOGY

EXAMPLE	CONTROL AND CIRCUIT DESIGNATION
C1-T2	C = CONTROL GROUP 1 = FIRST "C" CIRCUIT NUMBER T2 = SECOND TIER
DL1-GT	DL = CONTROL GROUP DL (DAYLIGHT ENTRY TRANSITION LIGHTING) 1 = FIRST "DL" CIRCUIT NUMBER GT = GROUND TIER

LIGHTING SEQUENCE

(INSCRIBE THIS SEQUENCE ON THE LOWER RIGHT CORNER OF THE LIGHTING CONTROL PANEL.)

1. "C" AND "NL" FIXTURES ARE CONTROLLED VIA INTEGRATED PHOTOCELL/OCCUPANCY SENSORS. SEE E-001 GENERAL NOTES FOR DETAILS.
2. "DL" FIXTURES ARE CONTROLLED VIA PHOTOCELL "DL" AND ARE TO BE ON DURING THE DAY AND OFF AT NIGHT TO PROVIDE SUPPLEMENTAL TRANSITION LIGHTING AT THE ENTRY DRIVE LANES.
3. "EXT" FIXTURES ARE CONTROLLED VIA PHOTOCELL "DL". FIXTURES ARE TO BE ON WHEN EXTERIOR LIGHT LEVELS FALL BELOW 5 FC.

1 LIGHTING CONTROL

PRELIMINARY - DO NOT USE FOR CONSTRUCTION

PRIME DESIGNER
WALKER CONSULTANTS
2895 Greenspoint Parkway, Suite 600
Hoffman Estates IL 60169
847.697.2640 Ph
www.walkerconsultants.com

ARCHITECTURAL
Studio Level 1
STUDIO LEVEL 1
1001 North Warren Street
Gary, IN 46403
219.951.0214 Ph
www.studiolevel1.com

Mount Prospect

MAPLE STREET PARKING DECK

MOUNT PROSPECT, IL

MARK	DATE	DESCRIPTION
		REVISIONS

SHEET ISSUE:	95% CONSTRUCTION DOCUMENTS
SHEET ISSUE DATE:	10/16/2019
PROJECT NO:	31-8504.00
DRAWN BY:	JPL
CHECKED BY:	JJJ

COPYRIGHT © 2019. ALL RIGHTS RESERVED. NO PART OF THIS DOCUMENT MAY BE REPRODUCED IN ANY FORM OR BY ANY MEANS WITHOUT PERMISSION FROM WALKER CONSULTANTS.

SHEET TITLE:
LIGHT FIXTURE SCHEDULE, GENERAL NOTES, SYMBOLS & ABBREVIATIONS

E-001

10/17/2019 10:19:36 AM C:\Revit Projects\31-8504.00-MAPLE STREET PG-MEP_R19_JLind.rvt

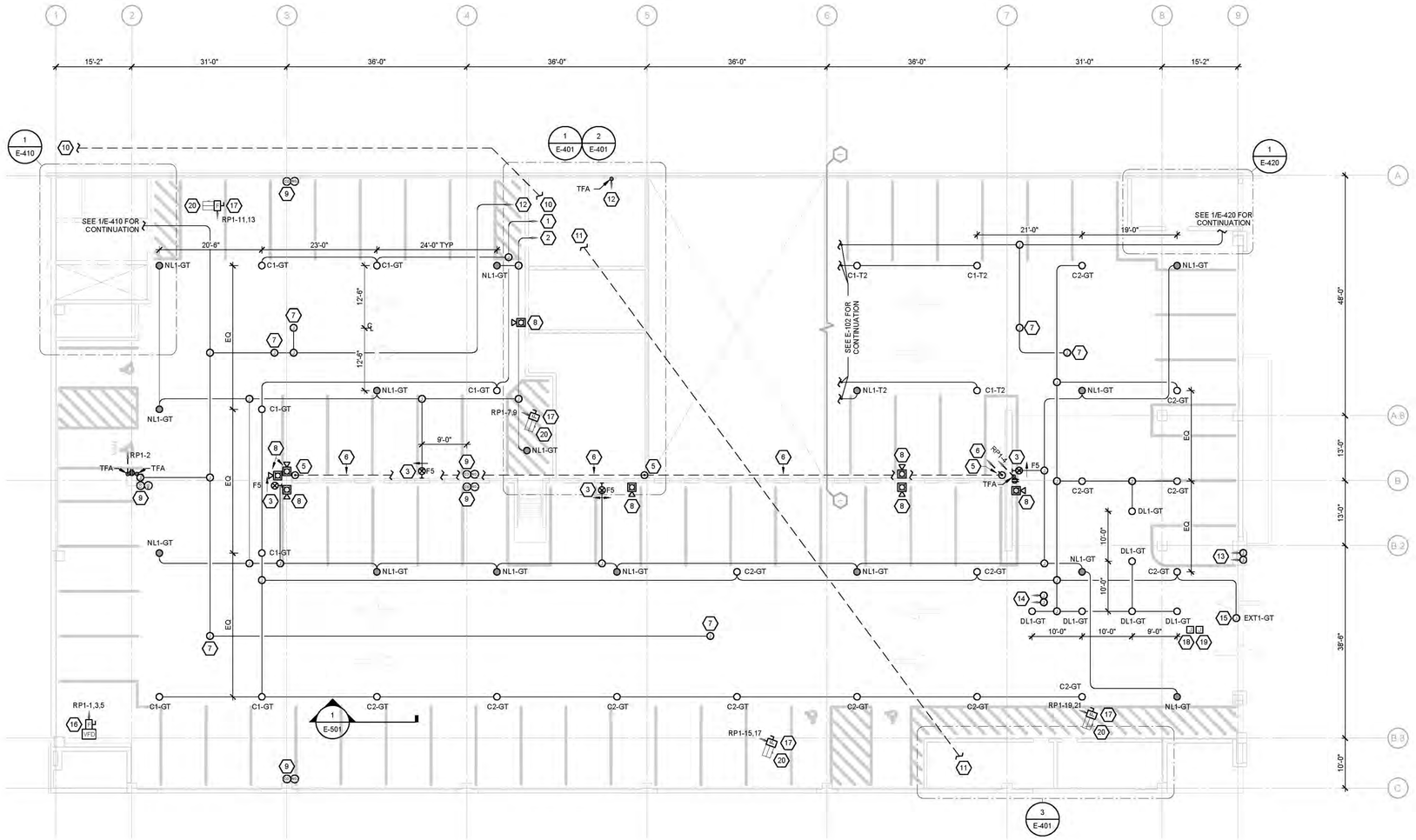

1 GROUND TIER PLAN

3/32" = 1'-0"

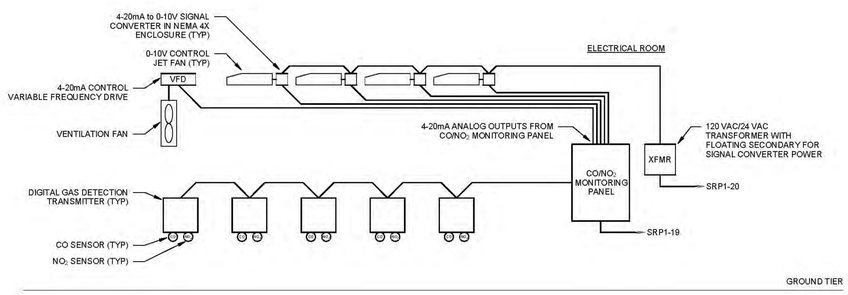

NOTES:

1. SEE SPECIFICATIONS SECTION 283112 FOR DETAILS.

2 CO/NO_2 MONITORING DIAGRAM

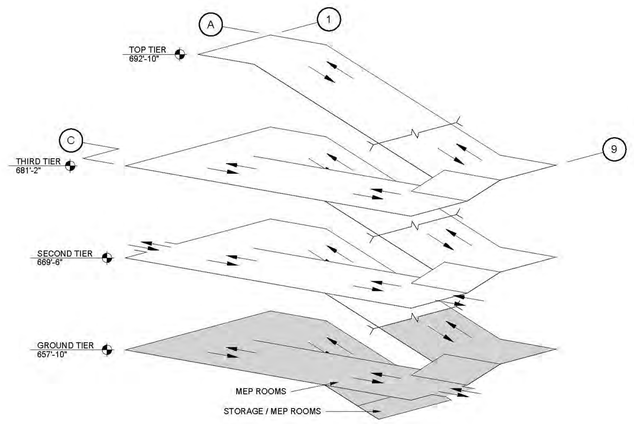

ISOMETRIC

SHEET NOTES

1. HOMERUNS TO PANEL LP1 IN THE ELECTRICAL ROOM.
2. HOMERUNS TO PANEL ELP1 IN THE ELECTRICAL ROOM.
3. CONNECT EXIT SIGN TO NEAREST NL CIRCUIT.
4. NOT USED.
5. DRIVE 10'-0" x 3/4" DIAMETER COPPER CLAD GROUND RODS AT LOCATIONS SHOWN. CONNECT TO TOP TIER LIGHT POLES WITH #4/0 COPPER CABLE IN 1" P.V.C. CONDUIT. PROVIDE PVC EXPANSION JOINT AS REQUIRED BY NEC.
6. CONNECT ALL LIGHT POLE GROUND RODS AND ELECTRICAL ROOM GROUNDING SYSTEM TOGETHER WITH BARE #4/0 COPPER CABLE LOCATED 1'-6" UNDER SLAB ON GRADE. CONNECT TO CABLES FROM TOP LEVEL LIGHT POLES.
7. FUTURE CAMERA LOCATION. PROVIDE JUNCTION BOX AND CONDUIT WITH PULL STRINGS. CAMERAS AND COMMUNICATIONS CABLING BY OTHERS. SEE CAMERA RISER DIAGRAM ON SHEET E-601 FOR CONDUIT SIZES.
8. FIRE ALARM/HORN/STROBE. MOUNT FIRE ALARM/HORN/STROBE 80" A.F.F. DO NOT ROUTE CONDUIT RISERS IN EXPANSION JOINT. SEE FIRE ALARM RISER DIAGRAM ON SHEET E-601 FOR ADDITIONAL INFORMATION.
9. DIGITAL GAS DETECTION TRANSMITTER WITH CARRON MONOXIDE AND NITROGEN DIOXIDE SENSORS. MOUNT 5'-6" A.F.F. ROUTE 3/4" CONDUIT CONTAINING MANUFACTURER'S RECOMMENDED CABLES TO CO/NO_2 MONITORING PANEL IN THE ELECTRICAL ROOM.
10. (4) 4" CONDUITS FROM ELECTRICAL ROOM TO UTILITY TRANSFORMER. COORDINATE WITH CIVIL.
11. (3) ½" CONDUITS, (3) 1" CONDUITS, (1) 2" CONDUIT, AND (1) 2½" CONDUIT FROM ELECTRICAL ROOM TO GENERATOR ROOM.
12. CONDUIT FOR FUTURE CCTV CAMERAS. CONTINUES TO COMMUNICATIONS BACKBOARD IN ELECTRICAL ROOM.
13. ALTERNATE NO. 2 - TOTEBOARD FOR AVAILABLE SPACES: PROVIDE JUNCTION BOX FOR SIGN POWER WITH ½" CONDUIT TO PANEL LP1 IN ELECTRICAL ROOM. PROVIDE JUNCTION BOX WITH ½" CONDUIT TO COMMUNICATIONS BACKBOARD IN ELECTRICAL ROOM FOR SIGN COMMUNICATIONS.
14. ALTERNATE NO. 3 - ILLUMINATED SIGNAGE DIRECTING PARKERS TO SPACES: PROVIDE JUNCTION BOX FOR SIGN POWER WITH ½" CONDUIT TO PANEL LP1 IN ELECTRICAL ROOM. PROVIDE JUNCTION BOX WITH ¾" CONDUIT TO COMMUNICATIONS BACKBOARD IN ELECTRICAL ROOM FOR SIGN COMMUNICATIONS.
15. PROVIDE JUNCTION BOX FOR ILLUMINATED SIGN POWER. COORDINATE EXACT LOCATION WITH ARCHITECT.
16. NEMA 3R, 20 AMP, 208 VOLT, FUSED DISCONNECT SWITCH. SQUARE D CATALOG No. H361RB OR APPROVED EQUIVALENT FOR 208V EXHAUST VENT POWER. SEE MECHANICAL DRAWINGS FOR EXACT LOCATION OF EQUIPMENT AND ADDITIONAL INFORMATION.
17. NEMA 3R, 15 AMP, 208 VOLT, FUSED DISCONNECT SWITCH. SQUARE D CATALOG No. H361RB OR APPROVED EQUIVALENT FOR 208V JET FAN POWER. MOUNT TO TEE STEM. SEE MECHANICAL DRAWINGS FOR EXACT LOCATION OF EQUIPMENT AND ADDITIONAL INFORMATION.
18. PROVIDE JUNCTION BOX IN GROUND WITH (1) 1½" CONDUIT TO ELECTRICAL ROOM FOR FUTURE PARCS EQUIPMENT POWER.
19. PROVIDE JUNCTION BOX IN GROUND WITH (2) 1½" CONDUITS TO ELECTRICAL ROOM FOR FUTURE PARCS EQUIPMENT COMMUNICATIONS.
20. PROVIDE 4-20mA to 0-10V SIGNAL CONVERTER IN NEMA 4X ENCLOSURE AT JET FAN LOCATION. PROVIDE ¾" CONDUIT WITH #12 AWG CONDUCTORS FOR SIGNAL WIRING TO CO/NO_2 MONITORING PANEL IN ELECTRICAL ROOM. PROVIDE ¾" CONDUIT WITH #8 AWG CONDUCTORS TO 24VAC TRANSFORMER IN ELECTRICAL ROOM FOR SIGNAL CONVERTER POWER. SEE CO/NO_2 MONITORING DIAGRAM ON THIS SHEET FOR DETAILS.

TRUE NORTH

PRELIMINARY - DO NOT USE FOR CONSTRUCTION

PRIME DESIGNER

WALKER CONSULTANTS

2895 Greenspoint Parkway, Suite 600
Hoffman Estates IL 60169
847.697.2640 Ph
www.walkerconsultants.com

ARCHITECTURAL

Studio Level 1

STUDIO LEVEL 1
1001 North Warren Street
Gary, IN 46403
219.951.0214 Ph
www.studiolevel1.com

Mount Prospect

MAPLE STREET
PARKING DECK

MOUNT PROSPECT, IL

MARK	DATE	DESCRIPTION
REVISIONS		

SHEET ISSUE:	95% CONSTRUCTION DOCUMENTS
SHEET ISSUE DATE:	10/16/2019
PROJECT NO:	31-8504.00
DRAWN BY:	JPL
CHECKED BY:	JJJ

COPYRIGHT © 2019, ALL RIGHTS RESERVED. NO PART OF THIS DOCUMENT MAY BE REPRODUCED IN ANY FORM OR BY ANY MEANS WITHOUT PERMISSION FROM WALKER CONSULTANTS.

SHEET TITLE:
GROUND TIER PLAN

E-101

10/17/2019 10:19:36 AM C:\Revit Projects\31-8504.00-MAPLE STREET PG-MEP_R19_JJJ.rvt

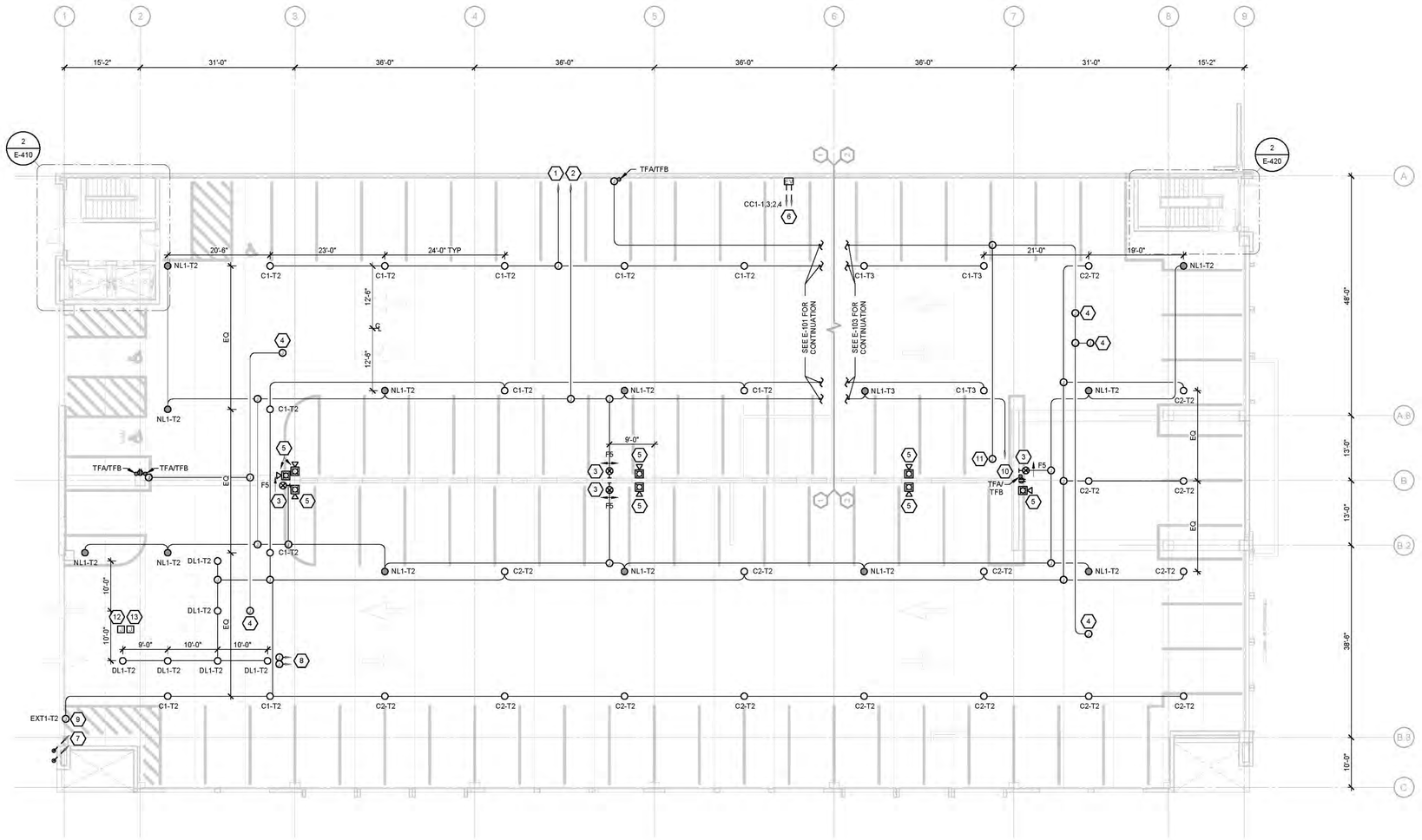

1 SECOND TIER PLAN
3/32" = 1'-0"

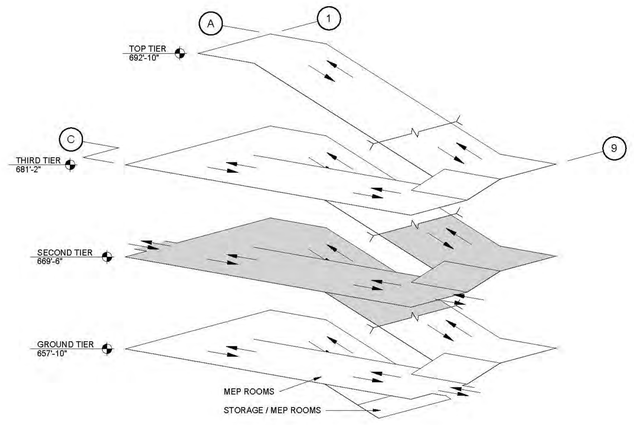

ISOMETRIC

SHEET NOTES

1. HOMERUNS TO PANEL LP1 IN THE ELECTRICAL ROOM.
2. HOMERUNS TO PANEL ELP1 IN THE ELECTRICAL ROOM.
3. CONNECT EXIT SIGN TO NEAREST NL CIRCUIT.
4. FUTURE CAMERA LOCATION. PROVIDE JUNCTION BOX AND CONDUIT WITH PULL STRINGS. CAMERAS AND COMMUNICATIONS CABLING BY OTHERS. SEE CAMERA RISER DIAGRAM ON SHEET E-601 FOR CONDUIT SIZES.
5. FIRE ALARM/HORN/STROBE. MOUNT FIRE ALARM/HORN/STROBE 80" A.F.F. DO NOT ROUTE CONDUIT RISERS IN EXPANSION JOINT. SEE FIRE ALARM RISER DIAGRAM ON SHEET E-601 FOR ADDITIONAL INFORMATION.
6. CHARGE POINT ELECTRIC VEHICLE CHARGING STATION MODEL CT4021-GW1. ROUTE 1" CONDUIT TO COMMUNICATIONS BACKBOARD LOCATED IN ELECTRICAL ROOM FOR DATA. ROUTE ONE 1-1/4" CONDUIT TO PANEL CC1 IN ELECTRICAL ROOM FOR POWER.
7. ALTERNATE NO. 2 - ILLUMINATED SIGNAGE FOR AVAILABLE SPACES: PROVIDE ¾" CONDUIT STUBBED AT SIGN LOCATION FROM PANEL LP1 IN ELECTRICAL ROOM FOR SIGN POWER. PROVIDE ½" CONDUIT STUBBED UP AT SIGN LOCATION TO COMMUNICATIONS BACKBOARD IN ELECTRICAL ROOM FOR SIGN COMMUNICATIONS.
8. ALTERNATE NO. 3 - ILLUMINATED SIGNAGE DIRECTING PARKERS TO SPACES: PROVIDE JUNCTION BOX FOR SIGN POWER WITH ½" CONDUIT TO PANEL LP1 IN ELECTRICAL ROOM. PROVIDE JUNCTION BOX WITH ¾" CONDUIT TO COMMUNICATIONS BACKBOARD IN ELECTRICAL ROOM FOR SIGN COMMUNICATIONS.
9. PROVIDE JUNCTION BOX FOR ILLUMINATED SIGN POWER. COORDINATE EXACT LOCATION WITH ARCHITECT.
10. CIRCUIT C1-1TT TO LIGHT POLE ON TIER ABOVE.
11. FUTURE POLE-MOUNTED CAMERA LOCATION AT LIGHT POLE ABOVE. PROVIDE JUNCTION BOX AND CONDUIT WITH PULL STRINGS AT CEILING BELOW POLE. CAMERAS AND COMMUNICATIONS CABLING BY OTHERS. SEE CAMERA RISER DIAGRAM ON SHEET E-601 FOR CONDUIT SIZES.
12. PROVIDE JUNCTION BOX IN GROUND WITH (1) 1½" CONDUIT TO ELECTRICAL ROOM FOR FUTURE PARCS EQUIPMENT POWER.
13. PROVIDE JUNCTION BOX IN GROUND WITH (2) 1½" CONDUITS TO ELECTRICAL ROOM FOR FUTURE PARCS EQUIPMENT COMMUNICATIONS.

PRELIMINARY - DO NOT USE FOR CONSTRUCTION

PRIME DESIGNER
WALKER CONSULTANTS
2895 Greenspoint Parkway, Suite 600
Hoffman Estates IL 60169
847.697.2640 Ph
www.walkerconsultants.com

ARCHITECTURAL
Studio Level 1
STUDIO LEVEL 1
1001 North Warren Street
Gary, IN 46403
219.951.0214 Ph
www.studiolevel1.com

Mount Prospect

MAPLE STREET
PARKING DECK

MOUNT PROSPECT, IL

MARK	DATE	DESCRIPTION
REVISIONS		

SHEET ISSUE:	95% CONSTRUCTION DOCUMENTS
SHEET ISSUE DATE:	10/16/2019
PROJECT NO:	31-8504.00
DRAWN BY:	JPL
CHECKED BY:	JJJ

COPYRIGHT © 2019. ALL RIGHTS RESERVED. NO PART OF THIS DOCUMENT MAY BE REPRODUCED IN ANY FORM OR BY ANY MEANS WITHOUT PERMISSION FROM WALKER CONSULTANTS.

SHEET TITLE:
SECOND TIER PLAN

E-102

10/17/2019 10:19:38 AM C:\Revit Projects\31-8504.00-MAPLE STREET PG-MEP_R19_JJJind.rvt

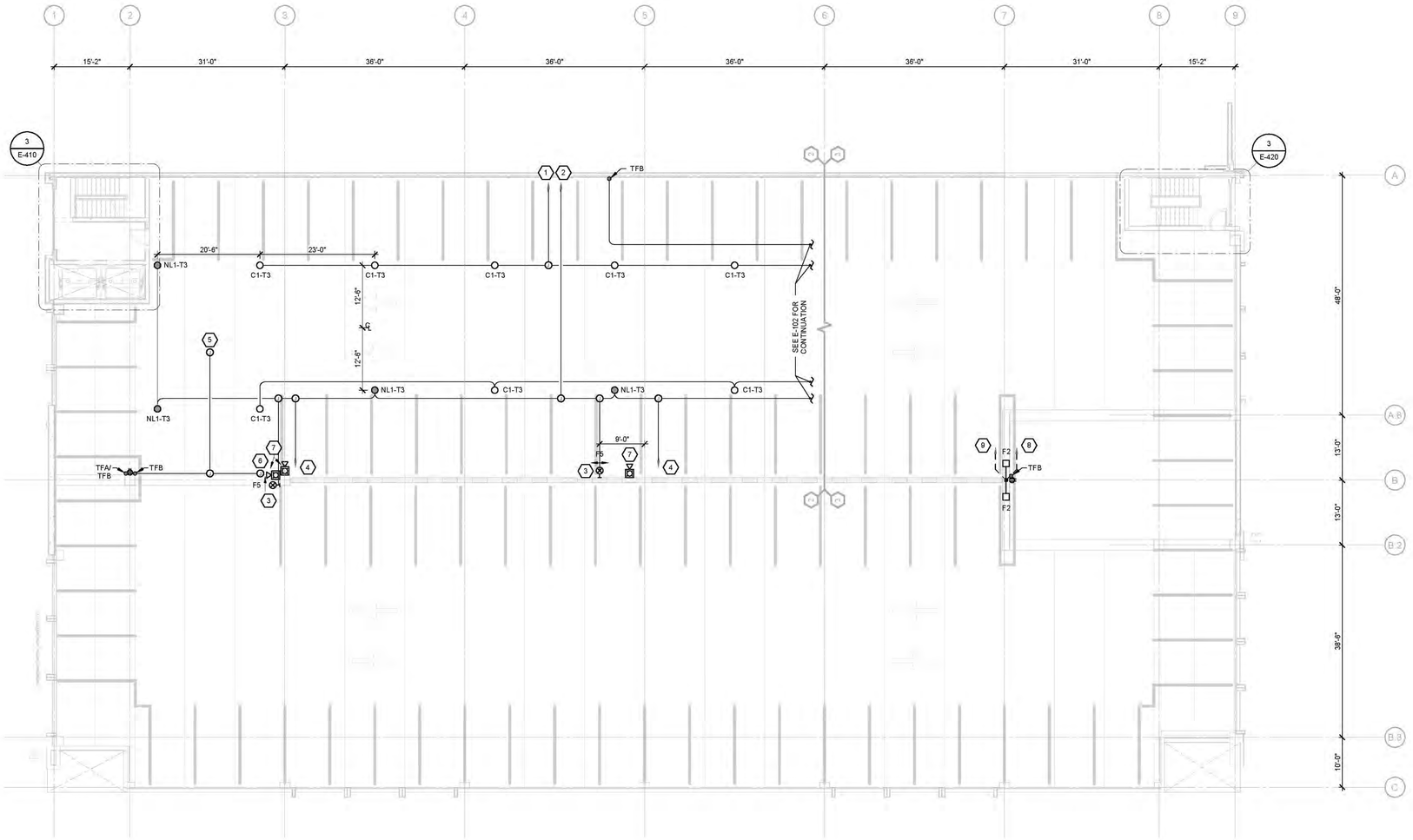

1 THIRD TIER PLAN
3/32" = 1'-0"

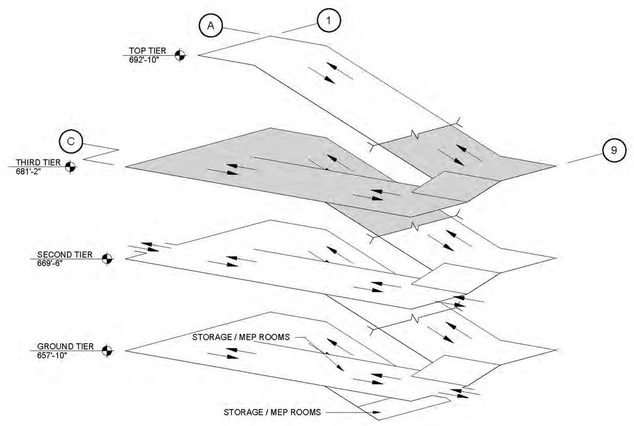

ISOMETRIC

SHEET NOTES

1. HOMERUNS TO PANEL LP1 IN THE ELECTRICAL ROOM.
2. HOMERUNS TO PANEL ELP1 IN THE ELECTRICAL ROOM.
3. CONNECT EXIT SIGN TO NEAREST NL CIRCUIT.
4. CIRCUIT C1-TT TO LIGHT POLE ON TIER ABOVE.
5. FUTURE CAMERA LOCATION. PROVIDE JUNCTION BOX AND CONDUIT WITH PULL STRINGS. CAMERAS AND COMMUNICATIONS CABLING BY OTHERS. SEE CAMERA RISER DIAGRAM ON SHEET E-601 FOR CONDUIT SIZES.
6. FUTURE POLE-MOUNTED CAMERA LOCATION AT LIGHT POLE ABOVE. PROVIDE JUNCTION BOX AND CONDUIT WITH PULL STRINGS AT CEILING BELOW POLE. CAMERAS AND COMMUNICATIONS CABLING BY OTHERS. SEE CAMERA RISER DIAGRAM ON SHEET E-601 FOR CONDUIT SIZES.
7. FIRE ALARM/HORN/STROBE. MOUNT FIRE ALARM/HORN/STROBE 80" A.F.F. DO NOT ROUTE CONDUIT RISERS IN EXPANSION JOINT. SEE FIRE ALARM RISER DIAGRAM ON SHEET E-601 FOR ADDITIONAL INFORMATION.
8. #4/0 BARE COPPER CABLE IN 1" PVC CONDUIT DOWN TO GROUND TIER GROUND RODS. SEE SHEET E-101 FOR ADDITIONAL INFORMATION.
9. CIRCUIT C1-TT FROM TIER BELOW.

PRELIMINARY - DO NOT USE FOR CONSTRUCTION

PRIME DESIGNER

WALKER CONSULTANTS

2895 Greenspoint Parkway, Suite 600
Hoffman Estates IL 60169
847.697.2640 Ph
www.walkerconsultants.com

ARCHITECTURAL

Studio Level 1

STUDIO LEVEL 1
1001 North Warren Street
Gary, IN 46403
219.951.0214 Ph
www.studiolevel1.com

Mount Prospect

MAPLE STREET
PARKING DECK

MOUNT PROSPECT, IL

MARK	DATE	DESCRIPTION
		REVISIONS
SHEET ISSUE:		95% CONSTRUCTION DOCUMENTS
SHEET ISSUE DATE:		10/16/2019
PROJECT NO:		31-8504.00
DRAWN BY:		JPL
CHECKED BY:		JJJ

COPYRIGHT © 2019, ALL RIGHTS RESERVED. NO PART OF THIS DOCUMENT MAY BE REPRODUCED IN ANY FORM OR BY ANY MEANS WITHOUT PERMISSION FROM WALKER CONSULTANTS.

SHEET TITLE:
THIRD TIER PLAN

E-103

10/17/2019 10:18:38 AM C:\Revit Projects\31-8504.00-MAPLE STREET PG-MEP_R19_JJund.rvt

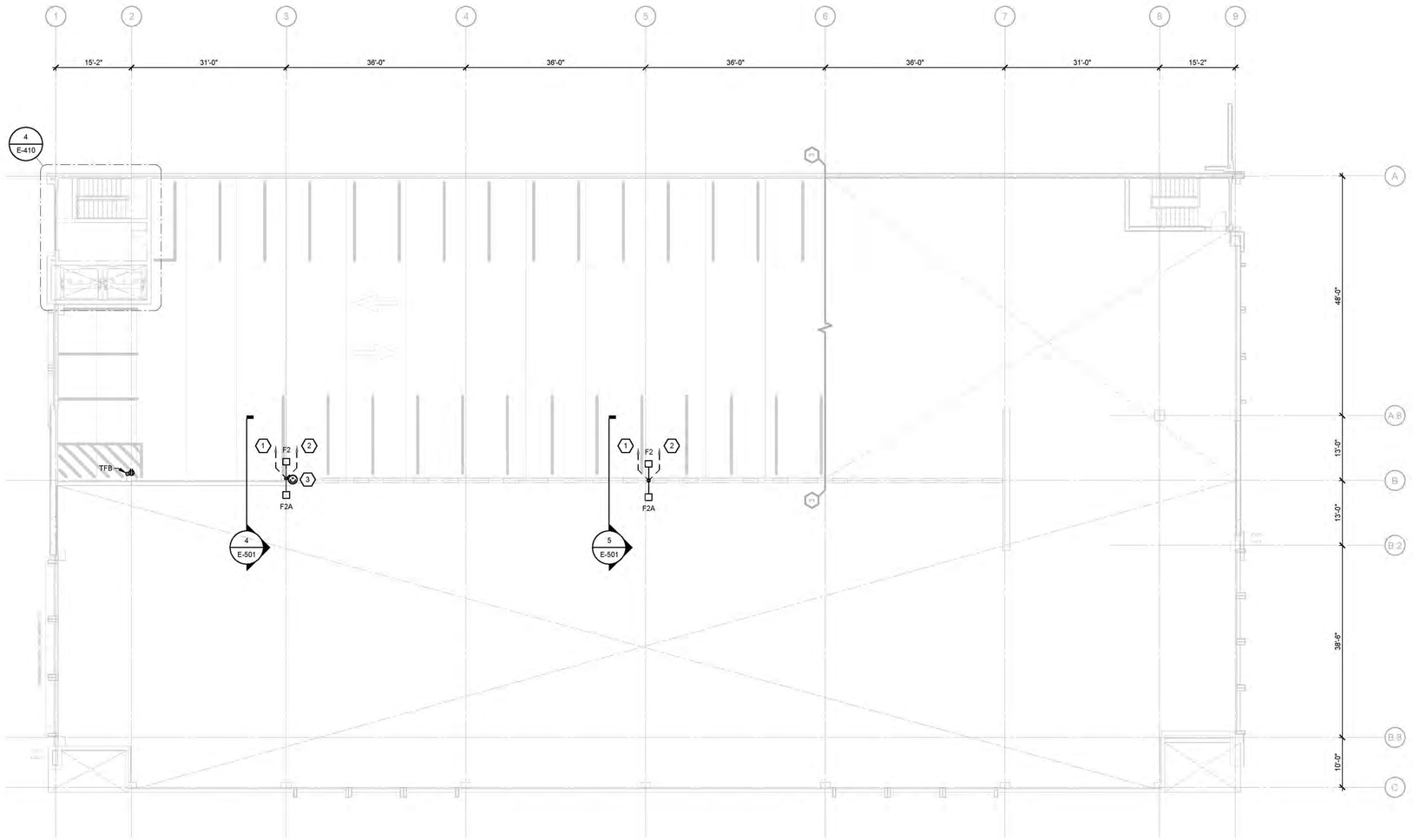

1 TOP TIER PLAN
3/32" = 1'-0"

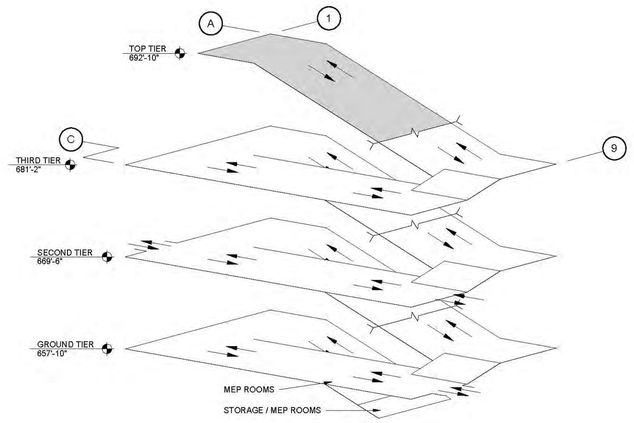

ISOMETRIC

SHEET NOTES

1. #4/0 BARE COPPER CABLE IN 1" PVC CONDUIT DOWN TO GROUND TIER GROUND RODS. SEE SHEET E-101 FOR ADDITIONAL INFORMATION.
2. CIRCUIT C1-TT FROM TIER BELOW.
3. PHOTOELECTRIC CONTROL "DL". MOUNT TO TOP OF LIGHT POLE AND AIM IN NORTH DIRECTION. RUN CIRCUIT IN SEPARATE CONDUIT TO THE LIGHTING CONTROL PANEL IN THE ELECTRICAL ROOM.

PRELIMINARY - DO NOT USE FOR CONSTRUCTION

PRIME DESIGNER

WALKER CONSULTANTS

2895 Greenspoint Parkway, Suite 600
Hoffman Estates IL 60169
847.697.2640 Ph
www.walkerconsultants.com

ARCHITECTURAL

Studio Level 1

STUDIO LEVEL 1
1001 North Warren Street
Gary, IN 46403
219.951.0214 Ph
www.studiolevel1.com

Mount Prospect

MAPLE STREET
PARKING DECK

MOUNT PROSPECT, IL

MARK	DATE	DESCRIPTION
		REVISIONS

SHEET ISSUE:	95% CONSTRUCTION DOCUMENTS
SHEET ISSUE DATE:	10/16/2019
PROJECT NO:	31-8504.00
DRAWN BY:	JPL
CHECKED BY:	JJJ

COPYRIGHT © 2019. ALL RIGHTS RESERVED. NO PART OF THIS DOCUMENT MAY BE REPRODUCED IN ANY FORM OR BY ANY MEANS WITHOUT PERMISSION FROM WALKER CONSULTANTS.

SHEET TITLE:
TOP TIER PLAN

E-104

10/17/2019 10:19:39 AM C:\Revit Projects\31-8504.00-MAPLE STREET PG-MEP_R19_JJJind.rvt

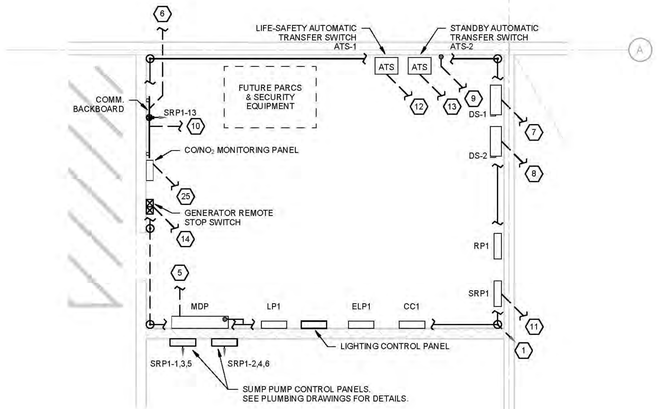

1 ENLARGED ELECTRICAL ROOM - EQUIPMENT AND GROUNDING PLAN

1/4" = 1'-0"

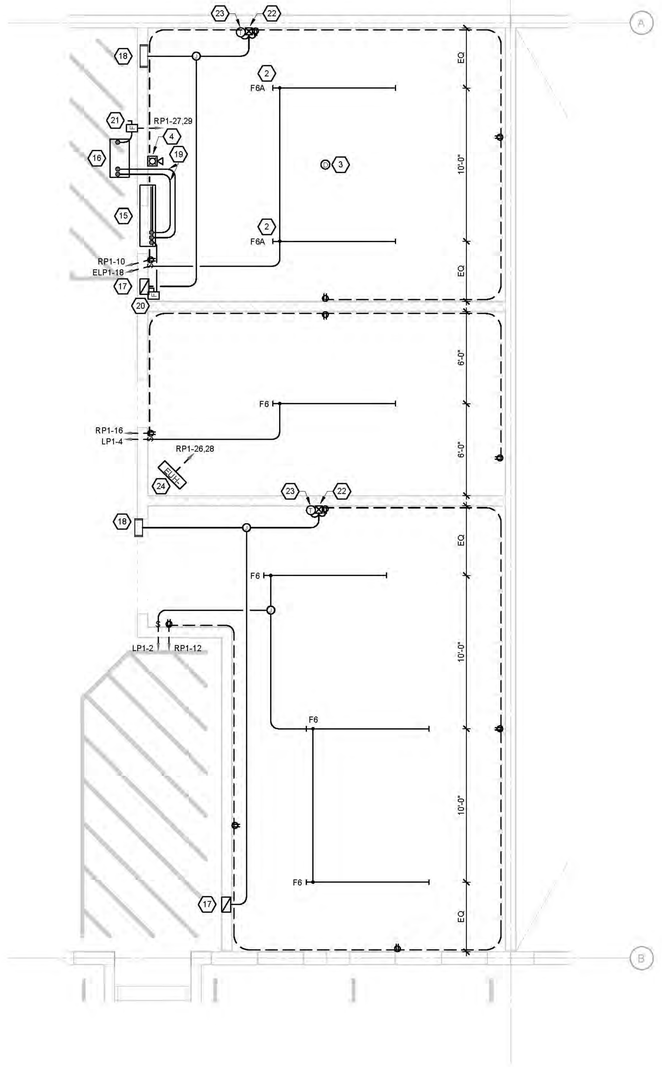

2 ENLARGED ELECTRICAL ROOM - LIGHTING AND POWER PLAN

1/4" = 1'-0"

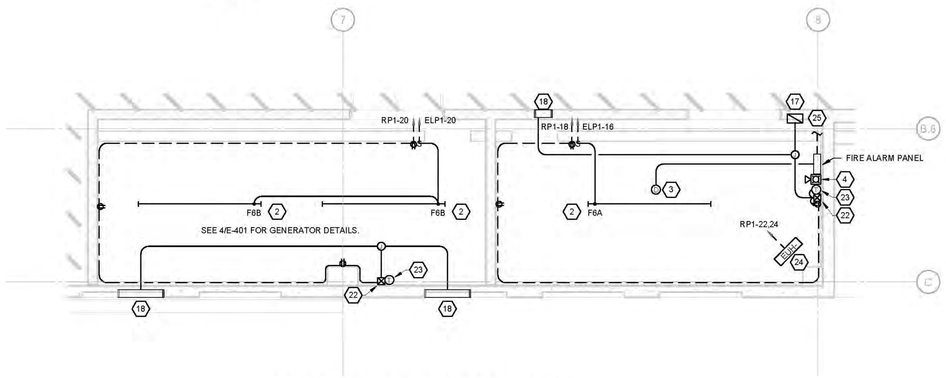

3 ENLARGED GENERATOR AND SPRINKLER ROOM PLANS

1/4" = 1'-0"

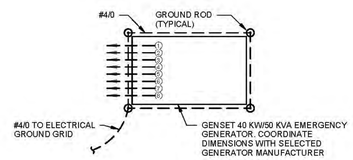

GENERATOR CONDUIT REFERENCE:

① ¾" CONDUIT WITH 7-#10 TO ELECTRICAL ROOM FOR GENERATOR REMOTE STOP SWITCH
② 1" CONDUIT WITH 7-#12 TO ELECTRICAL ROOM FOR REMOTE MONITORING
③ 1" CONDUIT TO PANEL SRP1 IN ELECTRICAL ROOM FOR BLOCK HEATER AND BATTERY CHARGER.
④ 1" CONDUIT TO ELECTRICAL ROOM FOR FOR L.S. NON FUSED DISCONNECT SWITCH.
⑤ 2½" CONDUIT TO ELECTRICAL ROOM FOR S.B. NON FUSED DISCONNECT SWITCH.
⑥ ¾" CONDUIT TO ELECTRICAL ROOM WITH 5-#10 FOR REMOTE START SIGNAL TO L.S. AUTOMATIC TRANSFER SWITCH.
⑦ ¾" CONDUIT TO ELECTRICAL ROOM WITH 5-#10 FOR REMOTE START SIGNAL TO S.B. AUTOMATIC TRANSFER SWITCH.
⑧ 2" SPARE CONDUIT TO ELECTRICAL ROOM

4 GENERATOR CONDUIT & GROUNDING DETAIL

SHEET NOTES①

1. ROUTE #4/0 COPPER CABLE IN 1" CONDUIT FROM THE ELECTRICAL ROOM TO GROUNDING GRID SHOWN ON E-101. PANEL MDP SHALL BE GROUNDED TO THIS GROUND GRID WITH #4/0 COPPER CABLE. IN ADDITION, THIS GROUNDING GRID SHALL BE CONNECTED TO REBAR IN FOUNDATION, METAL SERVICE PIPE AND ANY ADDITIONAL GROUNDS WITH #4/0 COPPER CABLE PER SECTION 250 OF THE N.E.C. CONNECT TO LIGHT POLE GROUND GIRD. SEE SHEET E-101 FOR ADDITIONAL INFORMATION.
2. CONNECT F6A/F6B FIXTURES PER MANUFACTURER'S INSTRUCTIONS SO IT IS SWITCHABLE BUT WILL AUTOMATICALLY TRANSFER TO BATTERY POWER UPON LOSS OF AC POWER.
3. WIRE HEAT/SMOKE DETECTORS TO FIRE ALARM PANEL IN SPRINKLER ROOM.
4. FIRE ALARM/HORN/STROBE. MOUNT FIRE ALARM/HORN/STROBE 72" A.F.F. DO NOT ROUTE CONDUIT RISERS IN EXPANSION JOINT. SEE FIRE ALARM DIAGRAM ON SHEET E-601 FOR ADDITIONAL INFORMATION.
5. (4) 4" CONDUITS FROM MDP TO UTILITY TRANSFORMER. THREE CONDUITS FOR POWER, ONE SPARE. SEE E-101 FOR CONTINUATION. COORDINATE WITH CIVIL.
6. (1) 4" CONDUIT FROM COMMUNICATIONS BOARD IN ELECTRICAL ROOM STUBBED UP 5'-0" OUTSIDE OF THE GARAGE. CIVIL TO CONTINUE. COORDINATE EXACT STUB UP LOCATIONS WITH CIVIL.
7. (1) 1" CONDUIT TO GENERATOR FROM THE LIFE SAFETY POWER FUSED DISCONNECT.
8. (1) 2½" CONDUIT TO GENERATOR FROM THE STANDBY POWER FUSED DISCONNECT.
9. ONE 2" CONDUIT FROM GENERATOR STUBBED UP AND CAPPED IN ELECTRICAL ROOM FOR SPARE.
10. (1) 1" CONDUIT FROM COMMUNICATIONS BACKBOARD TO GENERATOR FOR GENERATOR MONITORING.
11. (1) 1" CONDUIT FROM PANEL SRP1 FOR GENERATOR 208/120V POWER.
12. (1) 3/4" CONDUIT WITH 5-#10 TO GENERATOR FROM LIFE SAFETY ATS FOR REMOTE START SIGNAL.
13. (1) 3/4" CONDUIT WITH 5-#10 TO GENERATOR FROM STANDBY ATS FOR REMOTE START SIGNAL.
14. (1) 3/4" CONDUIT WITH 7-#10 TO GENERATOR FROM SHUNT TRIP FOR REMOTE START SIGNAL.
15. DUCT FREE SPLIT SYSTEM INDOOR HVAC UNIT. SEE MECHANICAL DRAWINGS FOR DETAILS.
16. DUCT FREE SPLIT SYSTEM OUTDOOR HVAC UNIT. SEE MECHANICAL DRAWINGS FOR DETAILS.
17. EXHAUST FAN. SEE MECHANICAL DRAWINGS FOR DETAILS.
18. LOUVER WITH MOTOR-OPERATED DAMPERS. SEE MECHANICAL DRAWINGS FOR DETAILS.
19. (2) ½" CONDUITS. ONE CONDUIT ROUTE 5-#10 FOR CONTROL WIRING, ONE CONDUIT FOR THERMISTOR CABLES. INSTALL EXPANSION LOOP AT LOCATIONS WHERE LINE CROSSES BUILDING EXPANSION JOINT. COORDINATE REQUIREMENTS WITH HVAC INSTALLER.
20. 25 AMP, 240V, FUSED DISCONNECT SWITCH FOR HVAC INDOOR UNIT. SQUARE D CATALOG NO. H221N. COORDINATE WITH HVAC INSTALLER.
21. 25 AMP, 240V, NEMA 3R FUSED DISCONNECT SWITCH FOR HVAC OUTDOOR UNIT. SQUARE D CATALOG NO. H221NRB. COORDINATE FUSE SIZE AND EXACT LOCATION OF DISCONNECT SWITCH WITH HVAC INSTALLER.
22. SQUARE D CATALOG NO. FG-1 MOTOR STARTER SWITCH.
23. THERMOSTAT, LINE VOLTAGE, TWO STAGE.
24. ELECTRIC UNIT HEATER. SEE MECHANICAL DRAWINGS FOR DETAILS.
25. 1" CONDUIT FROM FIRE ALARM PANEL IN SPRINKLER ROOM TO CO/NO2 MONITORING PANEL IN ELECTRICAL ROOM.

PRELIMINARY - DO NOT USE FOR CONSTRUCTION

PRIME DESIGNER

WALKER CONSULTANTS

2895 Greenspoint Parkway, Suite 600
Hoffman Estates IL 60169
847.697.2640 Ph
www.walkerconsultants.com

ARCHITECTURAL

Studio Level 1

STUDIO LEVEL 1
1001 North Warren Street
Gary, IN 46403
219.951.0214 Ph
www.studiolevel1.com

Mount Prospect

TRUE NORTH

MAPLE STREET PARKING DECK

MOUNT PROSPECT, IL

MARK	DATE	DESCRIPTION
		REVISIONS

SHEET ISSUE:	95% CONSTRUCTION DOCUMENTS
SHEET ISSUE DATE:	10/16/2019
PROJECT NO:	31-8504.00
DRAWN BY:	JPL
CHECKED BY:	JJJ

COPYRIGHT © 2019. ALL RIGHTS RESERVED. NO PART OF THIS DOCUMENT MAY BE REPRODUCED IN ANY FORM OR BY ANY MEANS WITHOUT PERMISSION FROM WALKER CONSULTANTS.

SHEET TITLE:
ENLARGED ROOM PLANS

E-401

10/17/2019 10:28:24 AM C:\Revit Projects\31-8504.00-MAPLE STREET PG-MEP_R19_JJJind.rvt

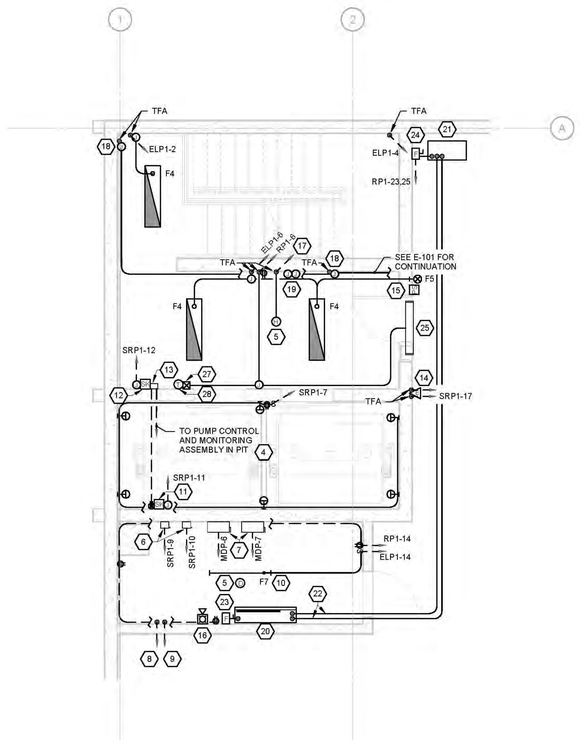

1 STAIR 1 - GROUND TIER PLAN
1/4" = 1'-0" 1 2

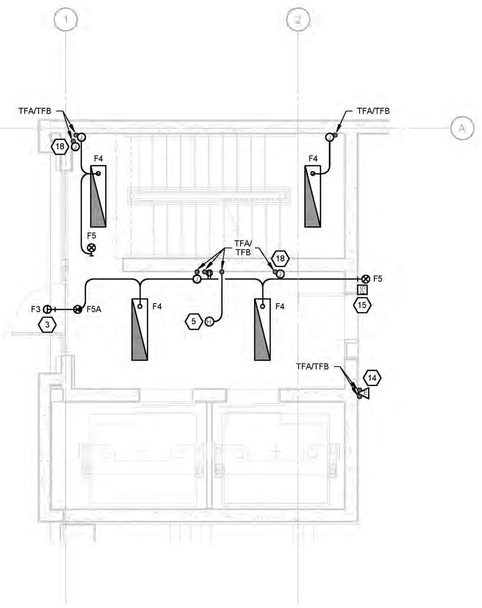

2 STAIR 1 - SECOND TIER PLAN
1/4" = 1'-0" 1 2

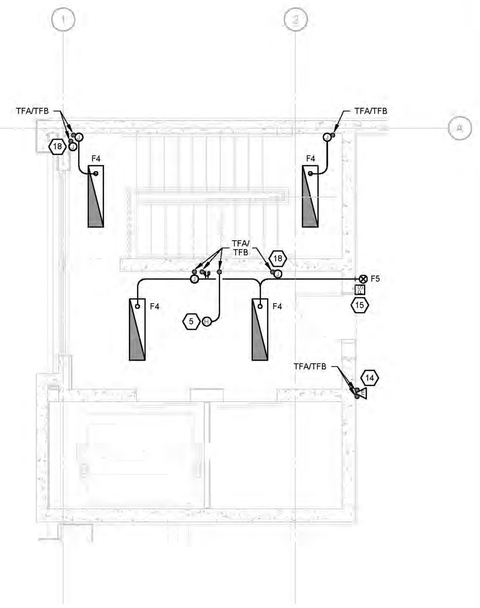

3 STAIR 1 - THIRD TIER PLAN
1/4" = 1'-0" 1 2

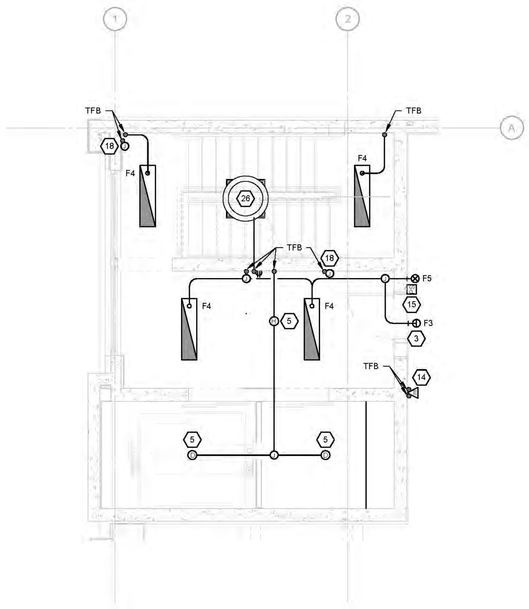

4 STAIR 1 - TOP TIER PLAN
1/4" = 1'-0" 1 2

SHEET NOTES

1. CONNECT ALL LIGHT FIXTURES IN STAIR MAIN LANDINGS TO CIRCUIT ELP1-2. CONNECT ALL FIXTURES IN STAIR INTERMEDIATE LANDINGS TO CIRCUIT ELP1-4. CONNECT ALL LIGHT FIXTURES IN ELEVATOR LOBBY TO CIRCUIT ELP1-6. CONNECT ALL F5 EXIT SIGNS TO CIRCUIT ELP1-12.
2. SEAL ALL OPENINGS IN TOP OF ALL F4 LIGHT FIXTURES BEFORE MOUNTING IN PLACE.
3. MOUNT F3 FIXTURES 10'-0" A.F.F. FIXTURES ARE TO BE FED THROUGH CONCRETE WITH EMBEDDED CONDUIT. COORDINATE WITH GENERAL CONTRACTOR.
4. LOCATE LIGHTS, LIGHT SWITCH, AND G.F.C.I. RECEPTACLE IN ELEVATOR PIT. MOUNT LIGHT SWITCH AND RECEPTACLE ADJACENT TO ENTRANCE OR LADDER.
5. WIRE SMOKE AND HEAT DETECTORS TO FIRE ALARM PANEL IN SPRINKLER ROOM. RUN CIRCUIT WITH DRY CONTACT OUTPUTS FROM FIRE ALARM PANEL TO ELEVATOR SEQUENCING EQUIPMENT. COORDINATE INSTALLATION WITH ELEVATOR INSTALLER.
6. 30 AMP, 120 VOLT, FUSED DISCONNECT SWITCH. SQUARE D CATALOG No H321N (COORDINATE FUSE SIZE AND EXACT LOCATION OF DISCONNECT SWITCH WITH ELEVATOR MANUFACTURER). FOR 120V ELEVATOR CAR POWER. (ELEVATOR INSTALLER WILL CONTINUE CIRCUIT TO ELEVATOR CAR.)
7. 125 AMP, 3 PHASE, 208 VOLT, FUSED DISCONNECT SWITCH. SQUARE D CATALOG No H324N WITH AUXILIARY CONTACTS (COORDINATE FUSE SIZE AND EXACT LOCATION OF DISCONNECT WITH ELEVATOR MANUFACTURER). FOR 208V ELEVATOR POWER.
8. 2-1" CONDUITS TO COMMUNICATIONS BACKBOARD IN ELECTRICAL ROOM.
9. ONE 1" CONDUIT TO FIRE ALARM PANEL IN THE SPRINKLER ROOM FOR ELEVATOR SEQUENCING.
10. CONNECT F7A FIXTURES PER MANUFACTURER'S INSTRUCTIONS SO IT IS SWITCHABLE BUT WILL AUTOMATICALLY TRANSFER TO BATTERY POWER UPON LOSS OF AC POWER.
11. SUPPLY WEATHERPROOF KEY OPERATED SWITCHES FOR SUMP PUMP AND HEAT TRACING. MOUNT SWITCHES 1'-0" ABOVE PIT COVER IN A JUNCTION BOX. HARDWIRE SUMP PUMP AND HEAT TRACE TO SWITCHES. SEE PLUMBING DRAWINGS FOR ADDITIONAL INFORMATION.
12. SUPPLY WEATHERPROOF KEY OPERATED SWITCH FOR OIL DETECTION CONTROL PANEL. MOUNTED NEXT TO OIL DETECTION CONTROL PANEL IN A JUNCTION BOX. HARDWIRE PANEL TO SWITCH. SEE PLUMBING DRAWINGS FOR ADDITIONAL INFORMATION.
13. OIL DETECTION CONTROL PANEL. MOUNT TOP OF PANEL 6" BELOW CEILING ABOVE. ROUTE ONE 3/4" CONDUIT TO KEY OPERATED SWITCH FOR POWER, ONE 3/4" CONDUIT TO PUMP CONTROL/MONITORING ASSEMBLY IN SUMP PIT AND ONE 3/4" CONDUIT TO WEATHERPROOF SIMPLEX RECEPTACLE IN ELEVATOR PIT. SEE PLUMBING DRAWINGS FOR ADDITIONAL INFORMATION.
14. EMERGENCY SPEAKER PHONE WITH BLUE LIGHT. LOCATION. PROVIDE TWO JUNCTION BOXES, ONE FOR COMMUNICATIONS AND ONE FOR BLUE LIGHT POWER. COORDINATE EXACT LOCATION AND DETAILS WITH PHONE INSTALLER. PHONE AND COMMUNICATIONS CABLING BY OTHERS. SEE EMERGENCY PHONE RISER DIAGRAM ON SHEET E-601 FOR CONDUIT SIZES.
15. FIRE ALARM PULL STATION. MOUNT TOP OF PULL STATION 48" A.F.F. DO NOT ROUTE CONDUIT RISERS IN EXPANSION JOINT. SEE FIRE ALARM RISER DIAGRAM ON SHEET E-601 FOR ADDITIONAL INFORMATION.
16. FIRE ALARM/HORN/STROBE. MOUNT FIRE ALARM/HORN/STROBE 72" A.F.F. DO NOT ROUTE CONDUIT RISERS IN EXPANSION JOINT. SEE FIRE ALARM RISER DIAGRAM ON SHEET E-601 FOR ADDITIONAL INFORMATION.
17. 1" CONDUIT TO FIRE ALARM PANEL IN SPRINKLER ROOM.
18. FUTURE CAMERA LOCATION. PROVIDE JUNCTION BOX AND CONDUIT WITH PULL STRINGS. CAMERAS AND COMMUNICATIONS CABLING BY OTHERS. SEE CAMERA RISER DIAGRAM ON SHEET E-601 FOR CONDUIT SIZES.
19. PROVIDE JUNCTION BOXES AT CEILING FOR FUTURE PAY-ON-FOOT STATION AT LOBBY ON LEVEL ABOVE. PROVIDE ¾" CONDUIT FROM ONE JUNCTION BOX TO COMMUNICATIONS BACKBOARD IN ELECTRICAL ROOM. PROVIDE ¾" CONDUIT FROM OTHER JUNCTION BOX TO PANEL SRP-1 IN ELECTRICAL ROOM.
20. DUCT FREE SPLIT SYSTEM INDOOR HVAC UNIT. SEE MECHANICAL DRAWINGS FOR DETAILS.
21. DUCT FREE SPLIT SYSTEM OUTDOOR HVAC UNIT. SEE MECHANICAL DRAWINGS FOR DETAILS.
22. (2) ¾" CONDUITS. ONE CONDUIT ROUTE 5-#10 FOR CONTROL WIRING. ONE CONDUIT FOR THERMISTOR CABLES. INSTALL EXPANSION LOOP AT LOCATIONS WHERE LINE CROSSES BUILDING EXPANSION JOINT. COORDINATE REQUIREMENTS WITH HVAC INSTALLER.
23. 25 AMP, 240V, FUSED DISCONNECT SWITCH FOR HVAC INDOOR UNIT. SQUARE D CATALOG NO. H221N. COORDINATE WITH HVAC INSTALLER.
24. 25 AMP, 240V, NEMA 3R FUSED DISCONNECT SWITCH FOR HVAC OUTDOOR UNIT. SQUARE D CATALOG NO. H221NRB. COORDINATE FUSE SIZE AND EXACT LOCATION OF DISCONNECT SWITCH WITH HVAC INSTALLER.
25. INTAKE LOUVER. SEE MECHANICAL DRAWINGS FOR DETAILS.
26. ROOF-MOUNTED EXHAUST FAN. SEE MECHANICAL DRAWINGS FOR DETAILS.
27. KEY-OPERATED MOTOR STARTER SWITCH FOR INTAKE LOUVER AND EXHAUST FAN.
28. THERMOSTAT, LINE VOLTAGE, TWO STAGE.

PRELIMINARY - DO NOT USE FOR CONSTRUCTION

PRIME DESIGNER

WALKER CONSULTANTS

2895 Greenspoint Parkway, Suite 600
Hoffman Estates IL 60169
847.697.2640 Ph
www.walkerconsultants.com

ARCHITECTURAL

Studio Level 1

STUDIO LEVEL 1
1001 North Warren Street
Gary, IN 46403
219.951.0214 Ph
www.studiolevel1.com

Mount Prospect

MAPLE STREET
PARKING DECK

MOUNT PROSPECT, IL

MARK	DATE	DESCRIPTION
		REVISIONS

SHEET ISSUE:	95% CONSTRUCTION DOCUMENTS
SHEET ISSUE DATE:	10/16/2019
PROJECT NO:	31-8504.00
DRAWN BY:	JPL
CHECKED BY:	JJJ

COPYRIGHT © 2019. ALL RIGHTS RESERVED. NO PART OF THIS DOCUMENT MAY BE REPRODUCED IN ANY FORM OR BY ANY MEANS WITHOUT PERMISSION FROM WALKER CONSULTANTS.

SHEET TITLE:
STAIR/ELEVATOR NO.1 PLANS

E-410

10/17/2019 10:19:41 AM C:\Revit Projects\31-8504.00-MAPLE STREET PG-MEP_R19_JJord.rvt

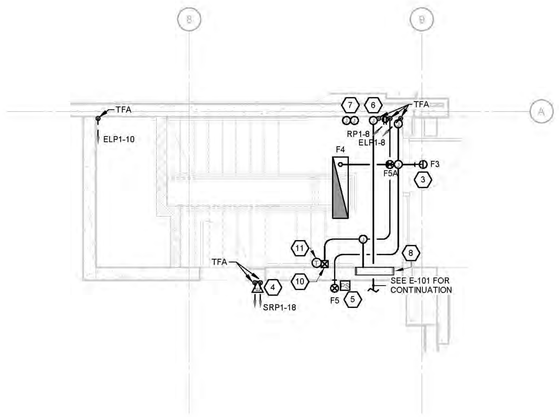

1 STAIR 2 - GROUND TIER PLAN

1/4" = 1'-0" 1 2

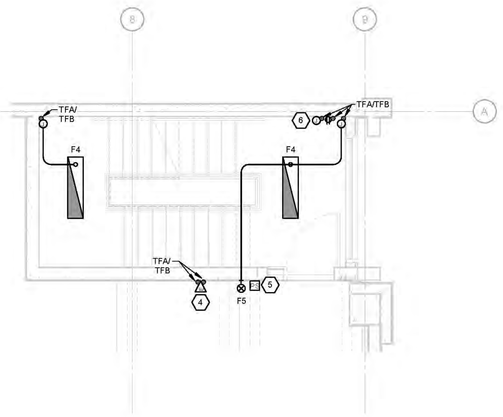

2 STAIR 2 - SECOND TIER PLAN

1/4" = 1'-0" 1 2

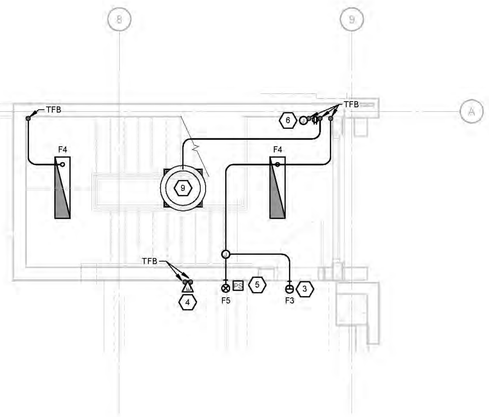

3 STAIR 2 - THIRD TIER PLAN

1/4" = 1'-0" 1 2

SHEET NOTES 7

1. CONNECT ALL LIGHT FIXTURES IN STAIR MAIN LANDINGS TO CIRCUIT ELP1-8. CONNECT ALL FIXTURES IN STAIR INTERMEDIATE LANDINGS TO CIRCUIT ELP1-10. CONNECT ALL F5 EXIT SIGNS TO CIRCUIT ELP1-12.
2. SEAL ALL OPENINGS IN TOP OF ALL F4 LIGHT FIXTURES BEFORE MOUNTING IN PLACE.
3. MOUNT F3 FIXTURES 10'-0" A.F.F. FIXTURES ARE TO BE FED THROUGH CONCRETE WITH EMBEDDED CONDUIT. COORDINATE WITH GENERAL CONTRACTOR.
4. EMERGENCY SPEAKER PHONE WITH BLUE LIGHT LOCATION. PROVIDE TWO JUNCTION BOXES, ONE FOR COMMUNICATIONS AND ONE FOR BLUE LIGHT POWER. COORDINATE EXACT LOCATION AND DETAILS WITH PHONE INSTALLER. PHONE AND COMMUNICATIONS CABLING BY OTHERS. SEE EMERGENCY PHONE RISER DIAGRAM ON SHEET E-601 FOR CONDUIT SIZES.
5. FIRE ALARM PULL STATION. MOUNT TOP OF PULL STATION 48" A.F.F. DO NOT ROUTE CONDUIT RISERS IN EXPANSION JOINT. SEE FIRE ALARM RISER DIAGRAM ON SHEET E-601 FOR ADDITIONAL INFORMATION.
6. FUTURE CAMERA LOCATION. PROVIDE JUNCTION BOX AND CONDUIT WITH PULL STRINGS. CAMERAS AND COMMUNICATIONS CABLING BY OTHERS. SEE CAMERA RISER DIAGRAM ON SHEET E-601 FOR CONDUIT SIZES.
7. PROVIDE JUNCTION BOXES FOR FUTURE PAY-ON-FOOT STATION. PROVIDE ¾" CONDUIT FROM ONE JUNCTION BOX TO COMMUNICATIONS BACKBOARD IN ELECTRICAL ROOM. PROVIDE ¾" CONDUIT FROM OTHER JUNCTION BOX TO PANEL SRP-1 IN ELECTRICAL ROOM.
8. INTAKE LOUVER. SEE MECHANICAL DRAWINGS FOR DETAILS.
9. ROOF-MOUNTED EXHAUST FAN. SEE MECHANICAL DRAWINGS FOR DETAILS.
10. KEY-OPERATED MOTOR STARTER SWITCH FOR INTAKE LOUVER AND EXHAUST FAN.
11. THERMOSTAT, LINE VOLTAGE, TWO STAGE.

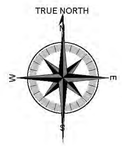

PRELIMINARY - DO NOT USE FOR CONSTRUCTION

PRIME DESIGNER

WALKER CONSULTANTS

2885 Greenspoint Parkway, Suite 600
Hoffman Estates IL 60169
847.697.2640 Ph
www.walkerconsultants.com

ARCHITECTURAL

Studio Level 1

STUDIO LEVEL 1
1001 North Warren Street
Gary, IN 46403
219.951.0214 Ph
www.studiolevel1.com

Mount Prospect

MAPLE STREET
PARKING DECK

MOUNT PROSPECT, IL

MARK	DATE	DESCRIPTION
		REVISIONS

SHEET ISSUE:	95% CONSTRUCTION DOCUMENTS
SHEET ISSUE DATE:	10/16/2019
PROJECT NO:	31-8504.00
DRAWN BY:	JPL
CHECKED BY:	JJJ

COPYRIGHT © 2019. ALL RIGHTS RESERVED. NO PART OF THIS DOCUMENT MAY BE REPRODUCED IN ANY FORM OR BY ANY MEANS WITHOUT PERMISSION FROM WALKER CONSULTANTS.

SHEET TITLE:
STAIR NO.2 PLANS

E-420

10/17/2019 10:19:41 AM C:\Revit Projects\31-8504.00-MAPLE STREET PG-MEP_R19_JJJmd.rvt

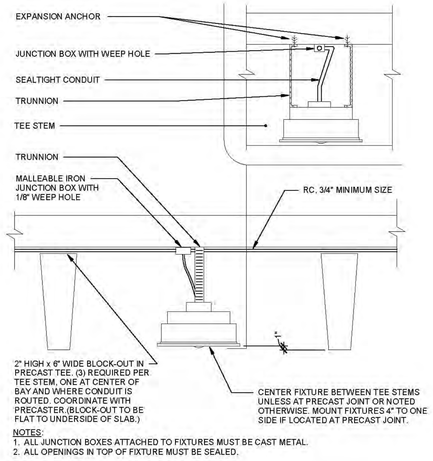

NOTES:
1. ALL JUNCTION BOXES ATTACHED TO FIXTURES MUST BE CAST METAL.
2. ALL OPENINGS IN TOP OF FIXTURE MUST BE SEALED.

1 FIXTURE F1 MOUNTING DETAIL

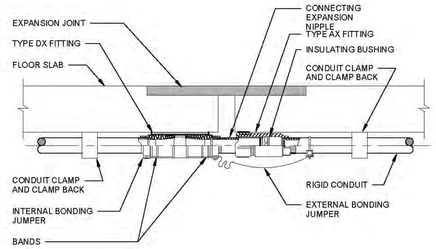

2 CONDUIT EXPANSION JOINT DETAIL

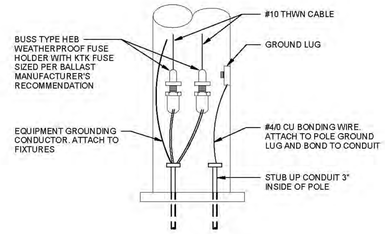

3 POLE WIRING DETAIL

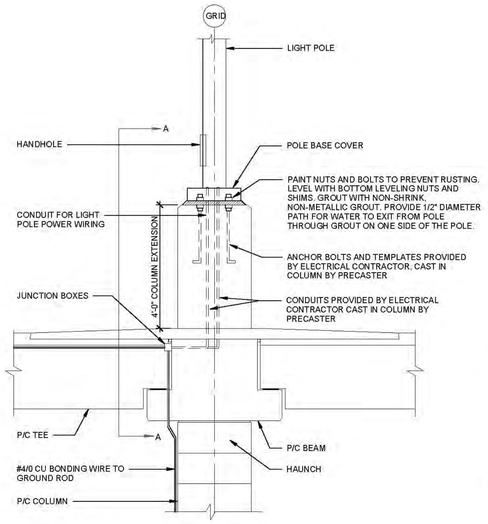

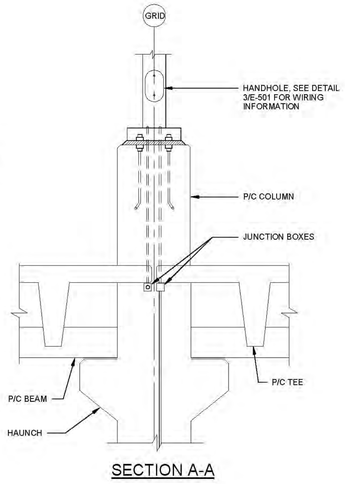

SECTION A-A

4 POLE MOUNTING DETAIL AT COLUMN

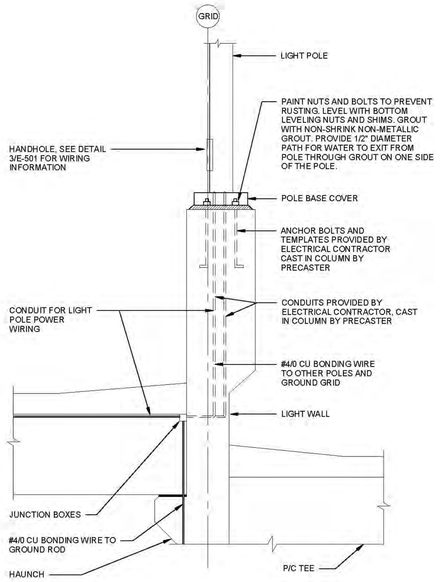

5 POLE MOUNTING DETAIL AT LIGHT WALL

PRELIMINARY - DO NOT USE FOR CONSTRUCTION

PRIME DESIGNER

WALKER CONSULTANTS

2885 Greenspoint Parkway, Suite 600
Hoffman Estates IL 60169
847.697.2640 Ph
www.walkerconsultants.com

ARCHITECTURAL

Studio Level 1

STUDIO LEVEL 1
1001 North Warren Street
Gary, IN 46403
219.951.0214 Ph
www.studiolevel1.com

MAPLE STREET
PARKING DECK

MOUNT PROSPECT, IL

MARK	DATE	DESCRIPTION
		REVISIONS

SHEET ISSUE:	95% CONSTRUCTION DOCUMENTS
SHEET ISSUE DATE:	10/16/2019
PROJECT NO:	31-8504.00
DRAWN BY:	JPL
CHECKED BY:	JJJ

COPYRIGHT © 2019. ALL RIGHTS RESERVED. NO PART OF THIS DOCUMENT MAY BE REPRODUCED IN ANY FORM OR BY ANY MEANS WITHOUT PERMISSION FROM WALKER CONSULTANTS.

SHEET TITLE:
DETAILS

E-501

10/17/2019 10:19:42 AM C:\Revit Projects\31-8504.00-MAPLE STREET PG-MEP_R19_JJurd.rvt

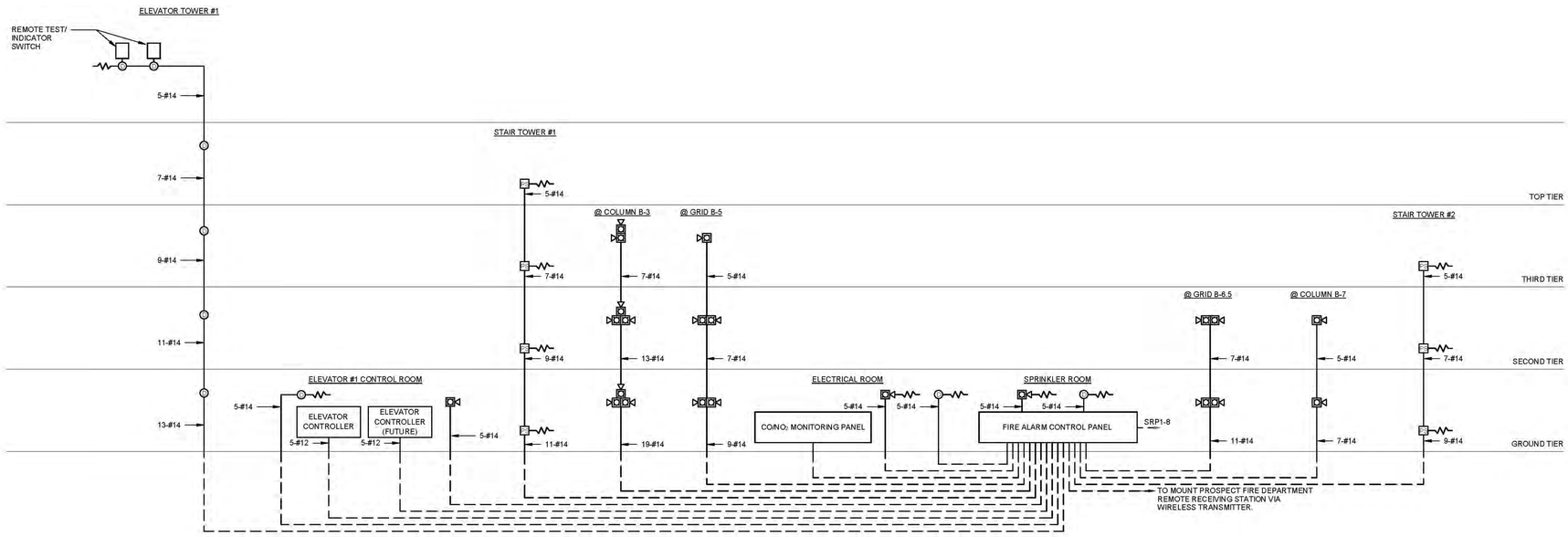

1 FIRE ALARM RISER DIAGRAM

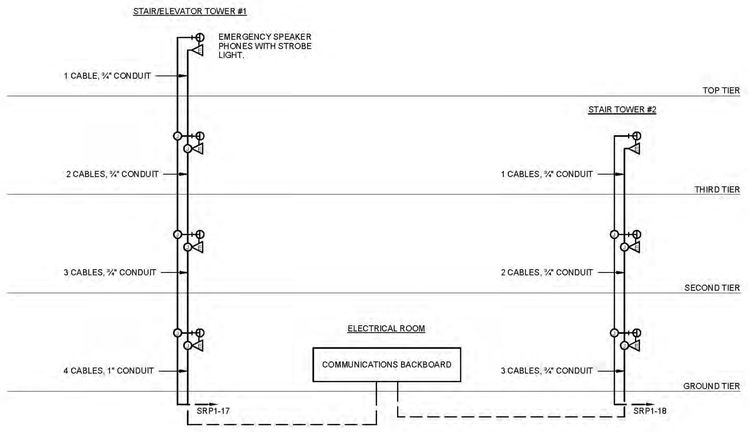

NOTES:

1. EMERGENCY PHONES AND COMMUNICATIONS CABLING BY OTHERS. PROVIDE JUNCTION BOXES AND CONDUIT WITH PULL STRINGS AT EMERGENCY PHONE LOCATIONS.

2 EMERGENCY PHONE RISER DIAGRAM

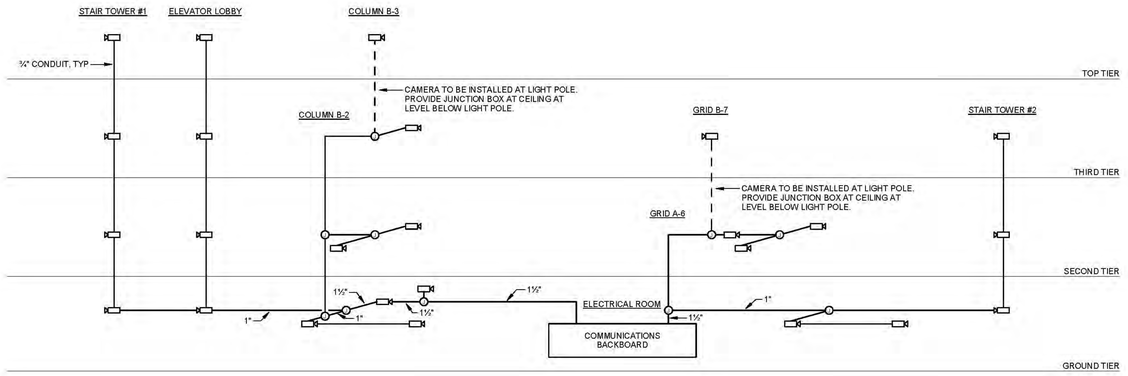

NOTES:

1. FUTURE CAMERAS AND COMMUNICATIONS CABLING TO BE PROVIDED BY OTHERS. PROVIDE JUNCTION BOXES AND CONDUITS WITH PULL STRINGS AT FUTURE CAMERA LOCATIONS.
2. CONDUIT SIZES ARE ¾" UNLESS NOTED OTHERWISE.

3 CAMERA RISER DIAGRAM

PRELIMINARY - DO NOT USE FOR CONSTRUCTION

PRIME DESIGNER

WALKER CONSULTANTS

2885 Greenspoint Parkway, Suite 600
Hoffman Estates IL 60169
847.697.2640 Ph
www.walkerconsultants.com

ARCHITECTURAL

Studio Level 1

STUDIO LEVEL 1
1001 North Warren Street
Gary, IN 46403
219.951.0214 Ph
www.studiolevel1.com

Mount Prospect

MAPLE STREET PARKING DECK

MOUNT PROSPECT, IL

MARK	DATE	DESCRIPTION
		REVISIONS

SHEET ISSUE:	95% CONSTRUCTION DOCUMENTS
SHEET ISSUE DATE:	10/16/2019
PROJECT NO:	31-8504.00
DRAWN BY:	JPL
CHECKED BY:	JJJ

COPYRIGHT © 2019. ALL RIGHTS RESERVED. NO PART OF THIS DOCUMENT MAY BE REPRODUCED IN ANY FORM OR BY ANY MEANS WITHOUT PERMISSION FROM WALKER CONSULTANTS.

SHEET TITLE:
RISER DIAGRAMS

E-601

10/17/2019 10:19:42 AM C:\Revit Projects\31-8504.00-MAPLE STREET PG-MEP_R19_JLind.rvt

MAIN DISTRIBUTION PANEL, "MDP": SQ-D TYPE I-LINE WITH
800 AMP MAIN CIRCUIT BREAKER, 65,000 AMP IESC RATING

VOLTS --> 208 120 AMPS--> 800

CT. NO.	LOCATION/DESCRIPTION/ QUANTITY	KILO-WATTS	WIRE SIZE	C.B. SIZE	PHASE A	PHASE B	PHASE C	C.B. SIZE	WIRE SIZE	KILO-WATTS	LOCATION/DESCRIPTION/ QUANTITY	CT. NO.
1	LIGHTING AND POWER PANEL LP1	3.3 3.0 3.5	1	100	90 — — —	— 96 — —	— — — 104	150	3/0	7.6 8.5 9.0	LIGHTING AND POWER PANEL RP1	2
3	EV CHARGING PANEL CC1	28.8 21.6 21.6	500 KCMIL	300	254 — — —	— 203 — —	— — — 193	60	4	1.6 2.7 1.6	LIFE-SAFETY AUTOMATIC TRANSFER SWITCH ATS-1 (FEEDS PANEL ELP1)	4
5	STANDBY POWER AUTOMATIC TRANSFER SWITCH ATS-1 (FEEDS PANEL SRP1)	7.5 10.6 8.6	4/0	200	146 — — —	— 172 — —	— — — 155	125	1	10.0 10.0 10.0	ELEVATOR #1 30 HP	6
7	(FUTURE) ELEVATOR #2 30 HP	10.0 10.0 10.0	1	125	83 — — —	— 83 — —	— — — 83	60	6		SURGE SUPPRESSOR SCHNEIDER ELECTRIC TVS4MA24	8
					A	B	C					

TOTAL KILOWATTS PER PHASE: 69 66 64 **TOTAL KILOWATTS:** 199

TOTAL AMPS PER PHASE: 573 553 535 **TOTAL AMPS:** 615

LIGHTING AND POWER PANEL , "LP1": SQ-D TYPE NQ WITH MAIN LUGS ONLY
& "QOB" BRANCH CIRCUIT BREAKERS, 35,000 AMP IESC RATING

VOLTS--> 208 Y/120V AMPS--> 100

CT. NO.	LOCATION/DESCRIPTION/ QUANTITY	WATTS	WIRE SIZE	C.B. AMP	PHASE A	PHASE B	PHASE C	C.B. AMP	WIRE SIZE	WATTS	LOCATION/DESCRIPTION/ QUANTITY	CT. NO.
1	DL1-GT: 6-F1	396	8	20	5	— —	— —	20	10	252	STORAGE ROOM LIGHTS: 3-F6	2
3	C1-GT: 7-F1	462	8	20	— —	5	— —	20	10	84	MECHANICAL ROOM LIGHTS: 1-F6	4
5	C2-GT: 14-F1	924	8	20	— —	— —	8	20			SPARE	6
7	DL1-T2: 6-F1	396	8	20	3	— —	— —	20			SPARE	8
9	C1-T2: 14-F1	924	8	20	— —	16	— —	20	8	1000	EXT1-GT: ILLUMINATED EXTERIOR SIGN 1	10
11	C2-T2: 16-F1	1056	8	20	— —	— —	17	20	8	1000	EXT1-T2: ILLUMINATED EXTERIOR SIGN 2	12
13	C1-T3: 11-F1	726	8	20	10	— —	— —	20	8	500	(ALTERNATE #2) SPACE AVAILABLE SIGN 1	14
15	SPARE			20	— —	4	— —	20	8	500	(ALTERNATE #2) SPACE AVAILABLE SIGN 2	16
17	SPARE			20	— —	— —	4	20	8	500	(ALTERNATE #3) SPACE AVAILABLE SIGN 3	18
19	LIGHTING SWITCHING PANEL	500	10	20	8	— —	— —	20	8	500	(ALTERNATE #3) SPACE AVAILABLE SIGN 4	20
21	SPARE			20	— —	0	— —	20			SPARE	22
23	SPARE			20	— —	— —	0	20			SPARE	24
25	SPARE			20	0	— —	— —	20			SPARE	26
27	SPARE			20	— —	0	— —	20			SPARE	28
29	SPARE			20	— —	— —	0	20			SPARE	30
	P--PADLOCK ATTACHMENT				A	B	C					
	L--LOCK ON ATTACHMENT											
	TOTAL WATTS PER PHASE:				3270	2970	3480				**TOTAL KILOWATTS:**	10
	TOTAL AMPS PER PHASE:				27	25	29				**TOTAL AMPS:**	30

EMERGENCY LIGHTING AND POWER PANEL , "ELP1": SQ-D TYPE NQ WITH MAIN LUGS ONLY
& "EDB" BRANCH CIRCUIT BREAKERS, 35,000 AMP IESC RATING

VOLTS--> 208 Y/120V AMPS--> 100

CT. NO.	LOCATION/DESCRIPTION/ QUANTITY	WATTS	WIRE SIZE	C.B. AMP	PHASE A	PHASE B	PHASE C	C.B. AMP	WIRE SIZE	WATTS	LOCATION/DESCRIPTION/ QUANTITY	CT. NO.
1	NL1-GT: 14-F1	924	10	20	10	— —	— —	20	10	240	STAIR 1 MAIN: 4-F4	2
3	NL1-T2: 13-F1	858	10	20	— —	9	— —	20	10	180	STAIR 1 INTERMEDIATE: 3-F4	4
5	NL1-T3: 5-F1	330	10	20	— —	— —	8	20	10	620	STAIR 1 LOBBY: 2-F3 / 8-F4	6
7	SPARE			20	3	— —	— —	20	10	320	STAIR 2 MAIN: 2-F3 / 3-F4	8
9	C1-TT: 4-F2 / 2-F2A	1482	8	20	— —	13	— —	20	10	120	STAIR 2 INTERMEDIATE: 2-F4	10
11	SPARE			20	— —	— —	4	20	10	500	EXIT SIGNS	12
13	SPARE			20	0	— —	— —	20	10	55	ELEV. MACHINE ROOM LIGHTS: 1-F7	14
15	SPARE			20	— —	1	— —	20	10	84	SPRINKLER ROOM LIGHTS: 1-F6A	16
17	SPARE			20	— —	— —	1	20	10	168	ELECTRICAL ROOM LIGHTS: 2-F6A	18
19	SPARE			20	1	— —	— —	20	10	100	GENERATOR ROOM LIGHTS: 2-F6B	20
21	SPARE			20	— —	0	— —	20			SPARE	22
23	SPACE				— —	— —	0				SPACE	24
25	SPACE				— —	— —	0				SPACE	26
27	SPACE				— —	0	— —				SPACE	28
29	SPACE				— —	— —	0				SPACE	30
	P--PADLOCK ATTACHMENT				A	B	C					
	L--LOCK ON ATTACHMENT											
	TOTAL WATTS PER PHASE:				1639	2724	1618				**TOTAL KILOWATTS:**	6
	TOTAL AMPS PER PHASE:				14	23	13				**TOTAL AMPS:**	18

LIGHTING AND POWER PANEL , "RP1": SQ-D TYPE NQ WITH MAIN LUGS ONLY
& "QOB" BRANCH CIRCUIT BREAKERS, 35,000 AMP IESC RATING

VOLTS--> 208 Y/120V AMPS--> 225

CT. NO.	LOCATION/DESCRIPTION/ QUANTITY	WATTS	WIRE SIZE	C.B. AMP	PHASE A	PHASE B	PHASE C	C.B. AMP	WIRE SIZE	WATTS	LOCATION/DESCRIPTION/ QUANTITY	CT. NO.
1	3 HP GARAGE VENTILATION EXHAUST FAN EF-1	1000	10	20	14	— —	— —	20	8	720	RECEPTACLES AT COLUMN B-2	2
3		1000			— —	13	— —	20	8	540	RECEPTACLES AT COLUMN B-7	4
5		1000			— —	— —	14	20	8	720	STAIR 1 RECEPTACLES	6
7	GARAGE VENTILATION JET FAN JF-1	280	10	15	7	— —	— —	20	8	540	STAIR 2 RECEPTACLES	8
9		280			— —	8	— —	20	8	720	ELECTRICAL ROOM RECEPTACLES	10
11	GARAGE VENTILATION JET FAN JF-1	280	10	15	— —	— —	10	20	8	900	STORAGE ROOM RECEPTACLES	12
13		280			7	— —	— —	20	8	540	ELEV. MACHINE ROOM RECEPTACLES	14
15	GARAGE VENTILATION JET FAN JF-1	280	10	15	— —	7	— —	20	8	540	MECHANICAL ROOM RECEPTACLES	16
17		280			— —	— —	7	20	8	540	SPRINKLER ROOM RECEPTACLES	18
19	GARAGE VENTILATION JET FAN JF-1	280	10	15	7	— —	— —	20	8	540	GENERATOR ROOM RECEPTACLES	20
21		280			— —	15	— —	20	8	1500	SPRINKLER ROOM UNIT HEATER EUH-1	22
23	ELEVATOR CONTROL ROOM AC HP-1	1872	10	25	— —	— —	28			1500		24
25		1872			28	— —	— —	20	8	1500	MECHANICAL ROOM UNIT HEATER EUH-2	26
27	ELECTRICAL ROOM AC HP-2	1872	10	25	— —	28	— —			1500		28
29		1872			— —	— —	16	20			SPARE	30
31	SPARE			20	0	— —	— —	20			SPARE	32
33	SPARE			20	— —	0	— —	20			SPARE	34
35	SPARE			20	— —	— —	0	20			SPARE	36
37	SPARE			20	0	— —	— —	20			SPARE	38
39	SPARE			20	— —	0	— —	20			SPARE	40
41	SPARE			20	— —	— —	0	20			SPARE	42
	P--PADLOCK ATTACHMENT				A	B	C					
	L--LOCK ON ATTACHMENT											
	TOTAL WATTS PER PHASE:				7552	8512	8964				**TOTAL KILOWATTS:**	25
	TOTAL AMPS PER PHASE:				63	71	75				**TOTAL AMPS:**	77

LIGHTING AND POWER PANEL , "CC1": SQ-D TYPE NQ WITH MAIN LUGS ONLY
& "QOB" BRANCH CIRCUIT BREAKERS, 35,000 AMP IESC RATING

VOLTS--> 208 Y/120 AMPS--> 400

CT. NO.	LOCATION/DESCRIPTION/ QUANTITY	WATTS	WIRE SIZE	C.B. AMP	PHASE A	PHASE B	PHASE C	C.B. AMP	WIRE SIZE	WATTS	LOCATION/DESCRIPTION/ QUANTITY	CT. NO.
1	CAR CHARGER	3600	8	40	60	—	—	40	8	3600	CAR CHARGER	2
3		3600			—	60	—			3600		4
5	CAR CHARGER (FUTURE)	3600	8	40	—	—	60	40	8	3600	CAR CHARGER (FUTURE)	6
7		3600			60	—	—			3600		8
9	CAR CHARGER (FUTURE)	3600	8	40	—	60	—	40	8	3600	CAR CHARGER (FUTURE)	10
11		3600			—	—	60			3600		12
13	CAR CHARGER (FUTURE)	3600	8	40	60	—	—	40	8	3600	CAR CHARGER (FUTURE)	14
15		3600			—	60	—			3600		16
17	CAR CHARGER (FUTURE)	3600	8	40	—	—	60	40	8	3600	CAR CHARGER (FUTURE)	18
19		3600			60	—	—			3600		20
21	SPACE				—	0	—				SPACE	22
23	SPACE				—	—	0				SPACE	24
25	SPACE				0	—	—				SPACE	26
27	SPACE				—	0	—				SPACE	28
29	SPACE				—	—	0				SPACE	30
	P--PADLOCK ATTACHMENT				A	B	C					
	L--LOCK ON ATTACHMENT											
	TOTAL WATTS PER PHASE:				28800	21600	21600				**TOTAL KILOWATTS:**	72
	TOTAL AMPS PER PHASE:				240	180	180				**TOTAL AMPS:**	222

LIGHTING AND POWER PANEL , "SRP-1": SQ-D TYPE NQ WITH MAIN LUGS ONLY
& "QOB" BRANCH CIRCUIT BREAKERS, 35,000 AMP IESC RATING

VOLTS--> 208 Y/120 AMPS--> 225

CT. NO.	LOCATION/DESCRIPTION/ QUANTITY	WATTS	WIRE SIZE	C.B. AMP	PHASE A	PHASE B	PHASE C	C.B. AMP	WIRE SIZE	WATTS	LOCATION/DESCRIPTION/ QUANTITY	CT. NO.
1	FOUNDATION DRAINAGE SUMP PUMP (5.0 HP, DUPLEX)	3333	8	50	30	—	—	15	10	250	SANITARY STORM DRAINAGE SUMP PUMP (0.75 HP, SINGLE)	2
3		3333			—	30	—			250		4
5		3333			—	—	30			250		6
7	ELEVATOR PIT LIGHTS	200	10	20	6	—	—	20	10	500	FIRE ALARM PANEL	8
9	ELEVATOR 1 CAB POWER	1000	8	30	—	17	—	30	8	1000	ELEVATOR 2 CAB POWER	10
11	ELEVATOR SUMP PUMP & HEAT TRACE	500	10	30	—	—	8	20	10	500	ELEVATOR OIL DETECTION PANEL	12
13	COMMUNICATIONS BACKBOARD	500	10	20	8	—	—	20	10	500	FUTURE CCTV	14
15	GENERATOR 120V POWER	1000	8	20	—	17	—	20	8	1000	GENERATOR 120V POWER	16
17	STAIR 1 EMERGENCY PHONES	500	10	20	—	—	8	20	10	500	STAIR 2 EMERGENCY PHONES	18
19	CO/NO_2 MONITORING PANEL	160	10	20	2	—	—	20	10	50	CO/NO_2 MONITORING CONTROL POWER	20
21	SPARE			20	—	0	—	20			SPARE	22
23	SPARE			20	—	—	0	20			SPARE	24
25	SPARE			20	0	—	—	20			SPARE	26
27	SPARE			20	—	0	—	20			SPARE	28
29	SPARE			20	—	—	0	20			SPARE	30
31	SPARE			20	0	—	—	20			SPARE	32
33	(FUTURE) PARCS ENTRANCE STATION 1	500	8	20	—	8	—	20	8	500	(FUTURE) PARCS ENTRANCE STATION 2	34
35	(FUTURE) PARCS EXIT STATION 1	500	10	20	—	—	8	20	10	500	(FUTURE) PARCS EXIT STATION 2	36
37	(FUTURE) POF STATION 1	1000	10	20	17	—	—	20	10	1000	(FUTURE) POF STATION 2	38
39	(FUTURE) PARCS ENTRY GATE 1	1000	8	20	—	17	—	20	8	1000	(FUTURE) PARCS ENTRY GATE 2	40
41	(FUTURE) PARCS EXIT GATE 1	1000	8	20	—	—	17	20	8	1000	(FUTURE) PARCS EXIT GATE 2	42
	P--PADLOCK ATTACHMENT				A	B	C				P--PADLOCK ATTACHMENT	
	L--LOCK ON ATTACHMENT										L--LOCK ON ATTACHMENT	
	TOTAL WATTS PER PHASE:				7493	10583	8583				**TOTAL KILOWATTS:**	27
	TOTAL AMPS PER PHASE:				62	88	72				**TOTAL AMPS:**	82

PRELIMINARY - DO NOT USE FOR CONSTRUCTION

PRIME DESIGNER

WALKER CONSULTANTS

2895 Greenspoint Parkway, Suite 600
Hoffman Estates IL 60169
847.697.2640 Ph
www.walkerconsultants.com

ARCHITECTURAL

Studio Level 1

STUDIO LEVEL 1
1001 North Warren Street
Gary, IN 46403
219.951.0214 Ph
www.studiolevel1.com

Mount Prospect

MAPLE STREET
PARKING DECK

MOUNT PROSPECT, IL

MARK	DATE	DESCRIPTION
		REVISIONS

SHEET ISSUE:	95% CONSTRUCTION DOCUMENTS
SHEET ISSUE DATE:	10/16/2019
PROJECT NO:	31-8594.00
DRAWN BY:	JPL
CHECKED BY:	JJJ

COPYRIGHT © 2019. ALL RIGHTS RESERVED. NO PART OF THIS DOCUMENT MAY BE REPRODUCED IN ANY FORM OR BY ANY MEANS WITHOUT PERMISSION FROM WALKER CONSULTANTS.

SHEET TITLE:
PANEL SCHEDULES

E-602

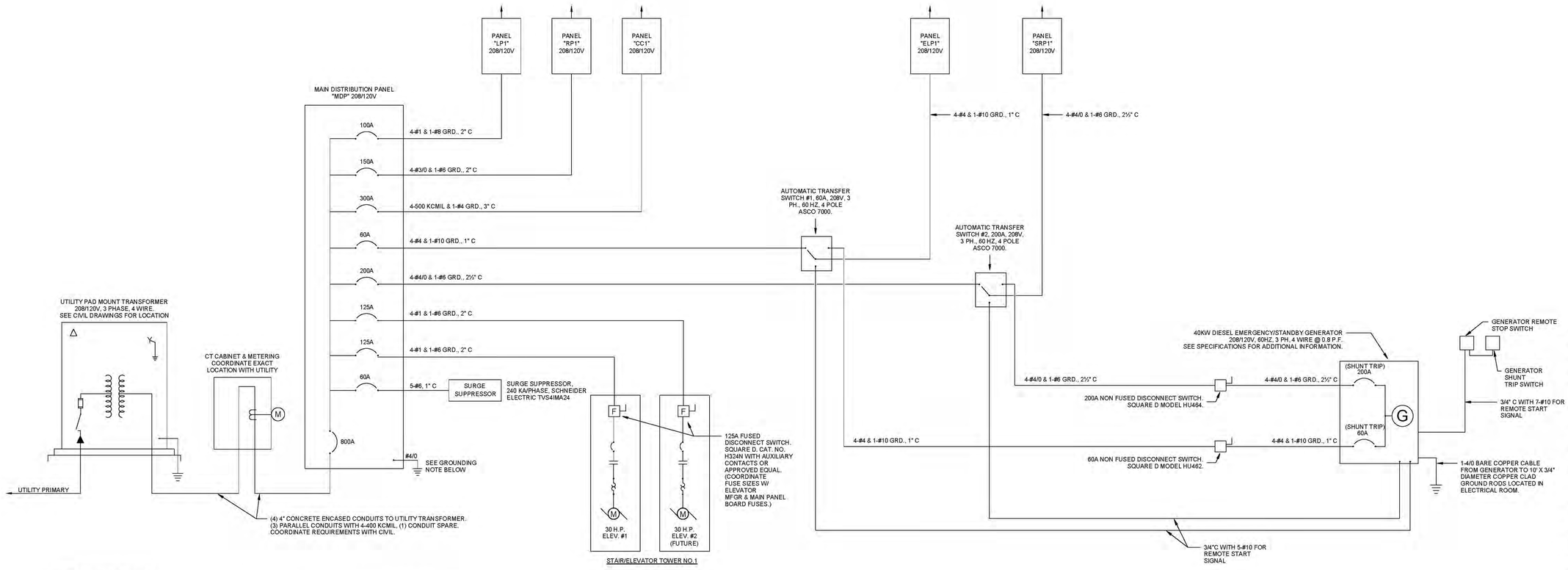

NORMAL POWER LOAD SUMMARY (INCLUDING EMERGENCY & STANDBY)		
LIGHTING	20	KVA
MOTORS	50	KVA
MISC	52	KVA
FUTURE	82	KVA
TOTAL CONNECTED LOAD	204	KVA

EMERGENCY LOAD SUMMARY		
LIGHTING	8	KVA
TOTAL CONNECTED LOAD	8	KVA

STANDBY LOAD SUMMARY		
MOTOR	13	KVA
MISC	9	KVA
FUTURE	10	KVA
TOTAL CONNECTED LOAD	32	KVA

ELEVATOR NOTES:
ALL MOTOR HORSEPOWER RATINGS SHOWN ARE APPROXIMATE. ALL MOTOR STARTERS, SWITCHES, PROTECTIVE DEVICES, WIRE, CONDUIT, ETC. SHALL BE SIZED IN ACCORDANCE WITH THE MOTOR HORSEPOWER DELIVERED TO THE JOB SITE.

FUSE NOTE:
ALL FUSES ARE TO BE BUSS FRS-R TYPE.

GROUNDING NOTE:
THE MDP PANEL AND THE EMERGENCY GENERATOR ARE TO BE GROUNDED TO THE GROUND GRID WITH #4/0 CU. CABLE.

SHORT CIRCUIT COORDINATION STUDY:
EQUIPMENT SUPPLIER SHALL PERFORM A COMPLETE SYSTEM SHORT CIRCUIT COORDINATION STUDY AND SUPPLY EQUIPMENT THAT IS PROPERLY RATED TO MEET THE CALCULATED VALUES.

1 POWER ONE LINE DIAGRAM

PRELIMINARY - DO NOT USE FOR CONSTRUCTION

PRIME DESIGNER
WALKER CONSULTANTS
2895 Greenspoint Parkway, Suite 600
Hoffman Estates IL 60169
847.697.2640 Ph
www.walkerconsultants.com

ARCHITECTURAL
Studio Level 1
STUDIO LEVEL 1
1001 North Warren Street
Gary, IN 46403
219.951.0214 Ph
www.studiolevel1.com

Mount Prospect

MAPLE STREET PARKING DECK

MOUNT PROSPECT, IL

MARK	DATE	DESCRIPTION
		REVISIONS

SHEET ISSUE:	95% CONSTRUCTION DOCUMENTS
SHEET ISSUE DATE:	10/18/2019
PROJECT NO:	31-8504.00
DRAWN BY:	JPL
CHECKED BY:	JJJ

COPYRIGHT © 2019. ALL RIGHTS RESERVED. NO PART OF THIS DOCUMENT MAY BE REPRODUCED IN ANY FORM OR BY ANY MEANS WITHOUT PERMISSION FROM WALKER CONSULTANTS.

SHEET TITLE:
POWER ONE LINE DIAGRAM

E-603

10/17/2019 10:19:44 AM C:\Revit Projects\31-8504.00-MAPLE STREET PG-MEP_R19_JJund.rvt